ALEABRAX SYSTEMS

Installation and Maintenance Manual for model

FCM 50

Floor standing premix condensing system boiler for outdoor installation

DO NOT SPRAY AEROSOLS IN THE VICINITY OF THIS APPLIANCE WHILE IT IS IN OPERATION.
DO NOT USE OR STORE FLAMMABLE MATERIALS IN OR NEAR THIS APPLIANCE.
DO NOT PLACE ARTICLES ON OR AGAINST THIS APPLIANCE.
DO NOT MODIFY THIS APPLIANCE.

FCM_50-ALE-ING-Man.Inst.-2103.1_firm.L224G

TABLE OF CONTENTS

INTRODUCTION 4

1. INSTALLER SECTION 7

1.1. INSTALLATION 8
1.1.1. GENERAL INSTALLATION WARNINGS 8
1.1.2. BOILER LOCATION ENVIRONMENTAL REQUIREMENTS 8
1.1.3. REFERENCE LEGISLATION 9
1.1.4. PRODUCTS TYPE - GENERAL INDICATIONS 10
1.1.5. UNPACKING 11
1.1.6. MECHANICAL SYSTEM DIAGRAM 12
1.1.7. OVERALL DIMENSIONS 13
1.1.8. HEAD/FLOW DIAGRAM 14
1.1.9. SYSTEM ACCESSORIES 15
1.1.10. INSTALLING THE BOILER 16
1.1.11. HYDRAULIC CONNECTION 17
1.1.12. CHARACTERISTICS OF THE WATER OF THE SYSTEM 18
1.1.13. SYSTEM FILLING 20
1.1.14. CONDENSATE DRAIN 21
1.1.15. ANTI-FREEZE PROTECTION 23
1.1.16. GAS CONNECTION 24
1.1.17. ELECTRICAL CONNECTION 24
1.1.18. POWER SUPPLY 25
1.1.19. MODBUS - CASCADE SYSTEM CONTROL UNIT CONNECTION 26
1.1.20. FUME EXHAUST FITTINGS 29
1.1.21. TYPES OF FUME EXHAUST SYSTEMS 30

2. SUPPORT CENTRE SECTION 31

2.1. FIRST START-UP 32
2.1.1. PRELIMINARY OPERATIONS FOR FIRST START-UP 32
2.1.2. BOILER COMMISSIONING 33
2.1.3. CO2 VALUE CHECK AND CALIBRATION 34
2.1.4. ACCESSING AND PROGRAMMING THE PARAMETERS 35
2.1.5. DIGITECH CS PARAMETERS TABLE 37
2.1.6. ELECTRIC FAN FREQUENCY/HEAT CAPACITY DIAGRAM 46

2.2. MAINTENANCE 47
2.2.7. GENERAL MAINTENANCE WARNINGS 47
2.2.8. TECHNICAL DATA 48
2.2.9. TECHNICAL ASSEMBLY 50
2.2.10. HYDRAULIC BOARD 51

2.2.11. WIRING DIAGRAM 52
2.2.12. ACCESSING THE BOILER 53
2.2.13. ACCESSING THE ELECTRONIC BOARD 54
2.2.14. SYSTEM EMPTYING 55
2.2.15. BOILER DEACTIVATION 55
2.2.16. MAINTENANCE OPERATIONS 56
2.2.17. FAULT SIGNALLING CODES 63
2.2.18. ACTIVE FUNCTIONS SIGNALLING CODES 67
2.2.19. GAS CONVERSION 68

INTRODUCTION

WARNING

Before starting any operation it is mandatory to read this instruction manual, in relation to the activities to be carried out as described in each relevant section. Proper operation and optimal performance of the boiler are ensured by strict compliance with all the instructions given in this manual.

The installation, use and maintenance manual is an integral and essential part of the product and must be delivered to the user.

MANUAL USERS

The manual users are all those who install, use and maintain the boiler.

The boiler must be used and accessed only by qualified operators that fully read and understood the use and maintenance manual, paying particular attention to the warnings.

READING AND SYMBOLS OF THE MANUAL

To ease the understanding of this manual, recurrent symbols where used, in particular:

› On the outer margin of the page is placed a thumb index indicating the type of user to which the instructions in that section address.

› The titles are differentiated by thickness and size in accordance with their hierarchy.

› The images contain important parts described in the text, marked with numbers or letters.

› (See chap "chapter name"): this entry indicates another section in the Manual that you should refer to.

› Device: this term is used referring to the boiler.

DANGER

It identifies an information related to a general danger that if not complied with, may cause serious personal damage or even death.

ATTENTION

It identifies an information that if not complied with may cause small or medium level lesions to the person or serious deterioration to the boiler.

WARNING

It identifies a precaution information that must be observed in order to avoid damaging the machine or parts of it.

MANUAL STORAGE

The manual must be carefully stored and replaced in case of deterioration and/or low legibility.

If you misplace the use and maintenance manual, you can request it from the Technical Support Centre giving the serial number and model of the boiler indicated on the plate placed on the right side of its casing.

WARNING

DO NOT SPRAY AEROSOLS IN THE VICINITY OF THIS APPLIANCE WHILE IT IS IN OPERATION.

DO NOT USE OR STORE FLAMMABLE MATERIALS IN OR NEAR THIS APPLIANCE.

DO NOT PLACE ARTICLES ON OR AGAINST THIS APPLIANCE.

DO NOT MODIFY THIS APPLIANCE.

MANUFACTURER WARRANTY AND RESPONSIBILITY

The warranty of the Manufacturer is provided only through its own authorized Technical Support Centres and covers all conformity defects at the moment of sale.

The technical and functional features of the device are ensured by its use in compliance:

1. with the use and maintenance instructions contained in the manuals accompanying the product, the content of which the customer certifies that he is aware;

2. with the conditions and purposes to which assets of the same type are intended.

For more information on the warranty validity, its duration, the obligations and the exemptions, please consult the First start-up certificate attached to this manual.

The manufacturer reserves:

› the right to modify the tools and relative technical documentation without any obligation to third parties; neither will the company be held responsible for any inaccuracies in this handbook deriving from printing or translation errors;

› the material and intellectual ownership of this manual and forbids its distribution and duplication, even partial, without prior written authorization.

1. INSTALLER SECTION

The installation operations described in this section should be performed only by qualified personnel, having the appropriate technical training in the field for the installation and maintenance of components of civil and industrial domestic hot water production and heating plants.

1.1. INSTALLATION

1.1.1. GENERAL INSTALLATION WARNINGS

ATTENTION

This machine may be used only for the purpose for which it has been designed: heat water to a temperature below boiling point at atmospheric pressure. Any other use is considered wrong and dangerous. The manufacturer is excluded from any contractual or out of contract responsibility for damage caused to people, animals or property due to errors during installation.

ATTENTION

This boiler should be installed only by qualified personnel, having the appropriate technical training in the field for the installation and maintenance of components of civil and industrial domestic hot water production and heating plants.

ATTENTION

After having removed the packing, make sure the equipment is intact. In case of doubt, do not use the equipment and contact the supplier.

ATTENTION

This Appliance must be used exclusively in a pressurized central heating system and is not suitable for pool heating.

BEFORE INSTALLING THE BOILER, THE INSTALLER MUST MAKE SURE THAT THE FOLLOWING CONDITIONS ARE MET:

› The device is connected to a heating plant and a water supply network appropriate for its power and performance.

› The location must be properly vented through an air vent.

› The air vent must be placed at floor level to prevent it from being obstructed, protected by a grid that does not hamper the useful section of passage.

› The device is suitable for use with the type of gas available by checking the boiler data plate (placed on the inner side of the front casing.

› Make sure that the tubes and couplings are perfectly sealed, without any gas leaks.

› Make sure that the grounding system works properly.

› Make sure that the electrical systems is suitable for the maximum power absorbed by the equipment, value indicated on the data plate.

WARNING

Use only original Aleabrax Systems optional or kit accessories (including electrical).

1.1.2. BOILER LOCATION ENVIRONMENTAL REQUIREMENTS

The boiler has a thermal power over 35 kW and, therefore, it must be installed only into a heating unit.

The device's installation location should be vented due to the presence of threaded joints on the gas adduction line. The location should be therefore provided with vents as to ensure air exchange, with output grid in the natural accumulation area of eventual gas losses.

WARNING

DO NOT install the boiler in a technical compartment near a swimming pool or a laundry, to avoid that the combustion air is exposed to chlorine, ammonia or alkaline agents that may worsen the corrosion phenomenon of the heat exchanger. Failure

to observe this caution will void the warranty of the heat exchanger.

WARNING

If the temperature in the boiler installation location goes below -10 centigrades, please fill the plant with anti-freeze liquid and insert and electrical resistances kit (see chapter 'ANTI-FREEZE PROTECTION').

WARNING

The manufacturer will not be held responsible for damages caused by incorrect installation not in conformity with the over mentioned instructions and not protected adequately from the freeze.

1.1.3. REFERENCE LEGISLATION

The installation must be realized according to the requirements of current legislation and in compliance with local technical regulations, according to the indications of the good technique.

This appliance must be installed by an authorised person in accordance with this instruction manual, AS/NZS 5601 – Gas installations (installation and pipe sizing), local gas fitting regulations, local electrical regulations, local water regulations, local health regulations, Building Code of Australia and any other government authority.

1.1.4. PRODUCTS TYPE - GENERAL INDICATIONS

By using the FCM series solution, which previews a cascade installation, the system offers the ideal output solution according to the different needs.

Boilers are in fact designed to suit cascade installations, up to a maximum of 8 boilers for a total output of 800 kW allowing a continuous output modulation, a continuous linear power modulation within a very low percentage of minimum power (depending on the type of boilers adopted and of the system maximum power) and the 100% of the installed power.

POSSIBLE CONFIGURATIONS

	FCM 50	FCM 100	HEAT OUTPUT [KW]	
Boiler version			Min.	Max
F 150	1	1	5	150
F 200		2	5	200
F 250	1	2	5	250
F 300		3	5	300
F 350	1	3	5	350
F 400		4	5	400
F 450	1	4	5	450
F 500		5	5	500

Attention: For outputs higher than 500 kW, please contact our technical department.

1.1.5. UNPACKING

WARNING

Please unpack the boiler just before installing it. The Company is not responsible for the damages caused to the device due to incorrect storage.

WARNING

The packing elements (cardboard box, wooden crate, nails, fasteners, plastic bags, expanded polystyrene, etc.) must be kept out of the reach of children as they may be dangerous. Therefore they should be dismantled suitably differentiating them in accordance with the standards in force.

To unpack the boiler, proceed as follows:

› cut the fixing strip (see A-fig.1);

› remove the cardboard box lifting it upwards (see B-fig.1);

› push the boiler on one side and remove the pallet underneath (see C-fig.1).

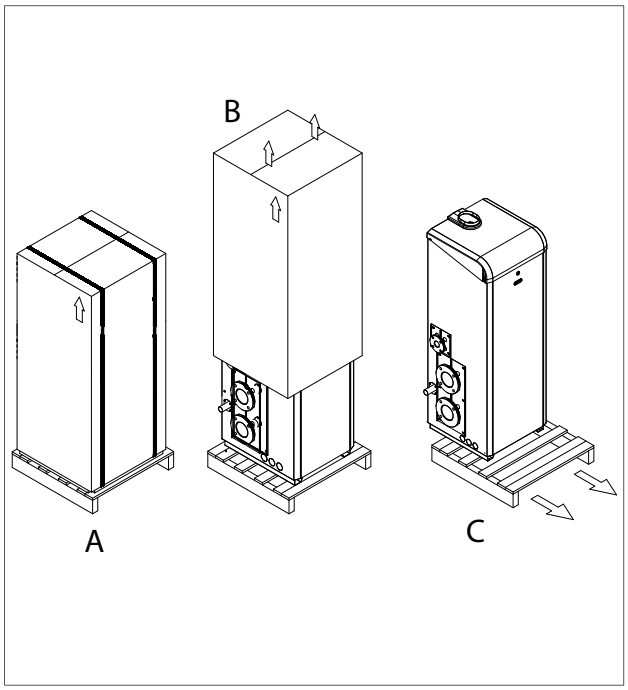

fig. 1

1.1.6. MECHANICAL SYSTEM DIAGRAM

Here below an example of a modular cascade installation.

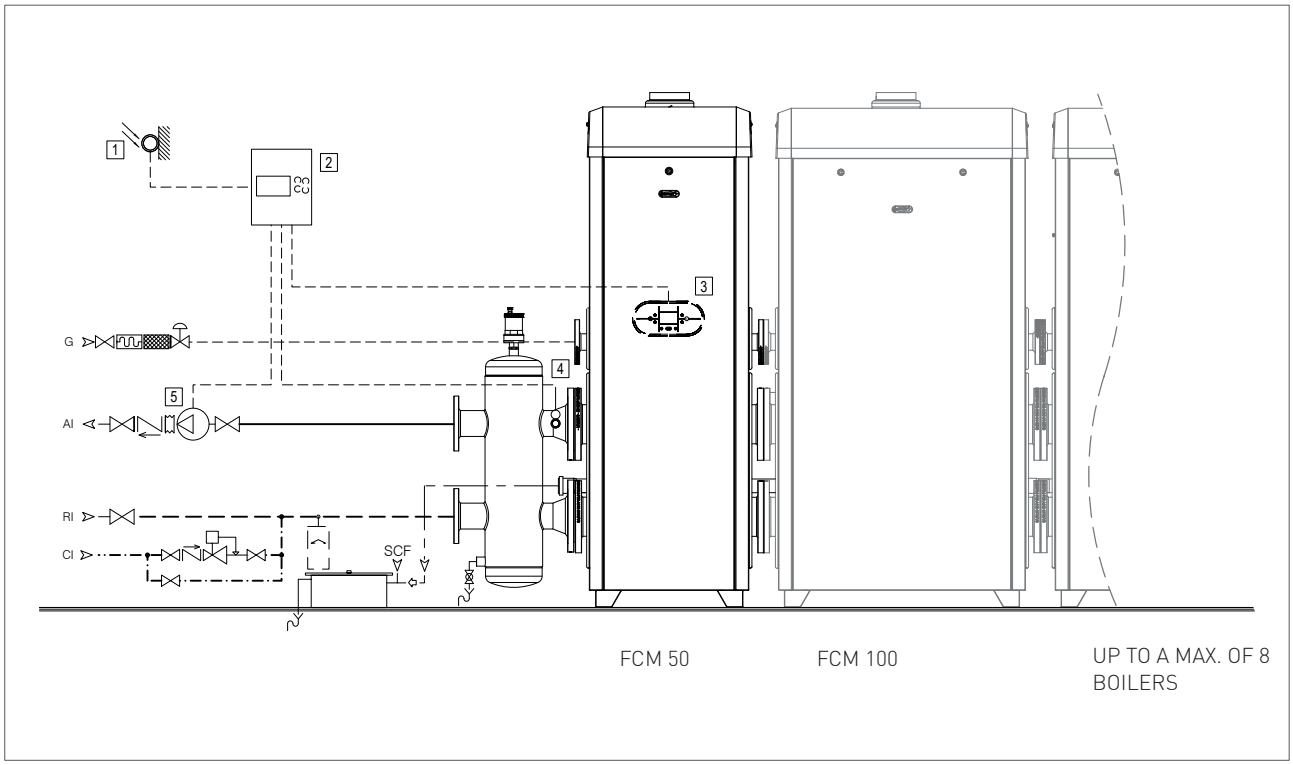

KEY

1	OUTDOOR TEMPERATURE SENSOR
2	CASCADE REGULATOR MODBUS
3	CONTROL PANEL
4	MANIFOLD SENSOR
5	HEATING CIRCUIT PUMP
AI	C.H. FLOW
RI	C.H. RETURN
CI	FILLING GROUP
G	GAS
SCF	CHIMNEY CONDENSATE DRAIN

1.1.7. OVERALL DIMENSIONS

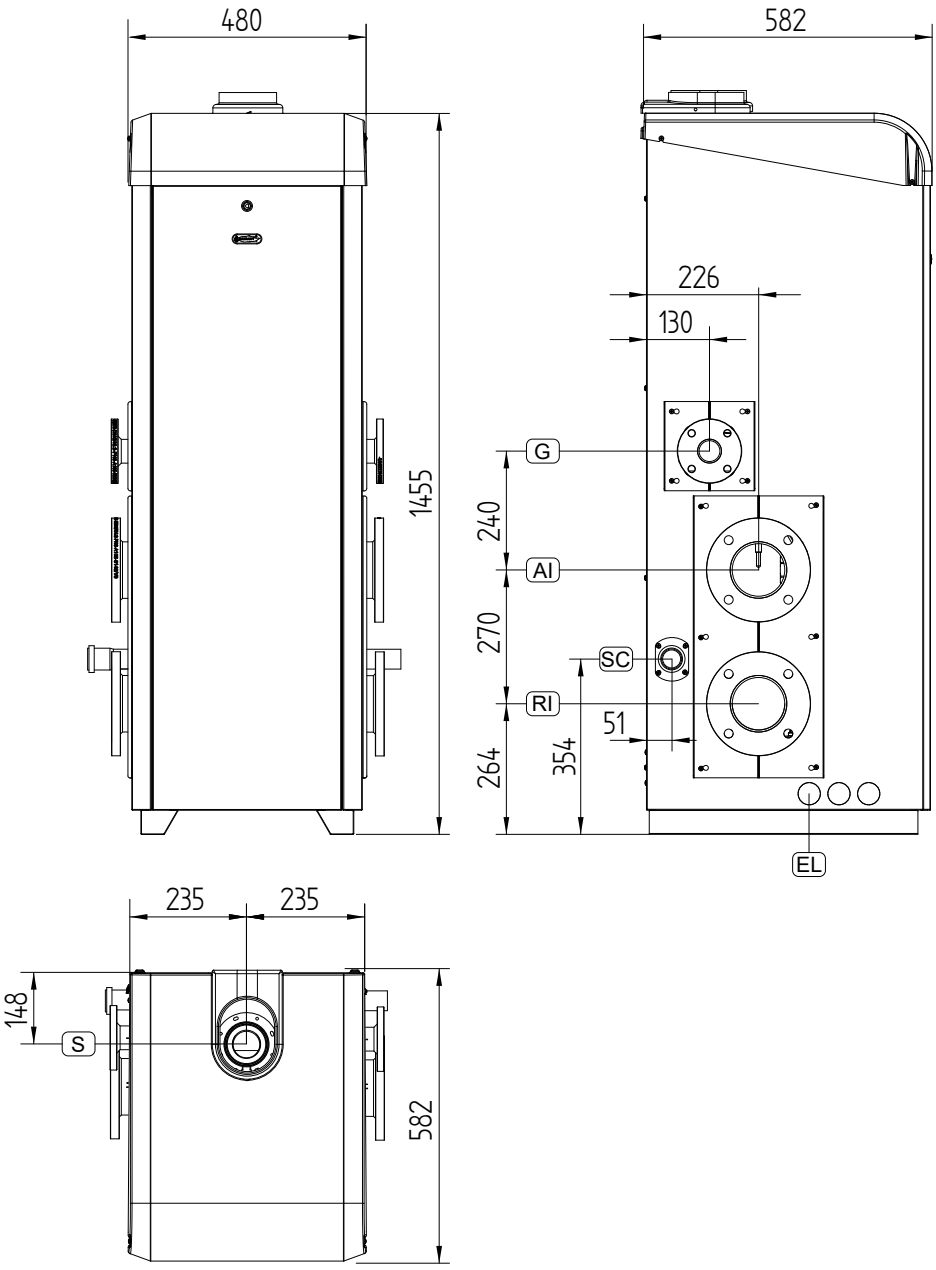

fig. 1

KEY

RI	C.H. RETURN	DN100-PN6
AI	C.H. FLOW	DN100-PN6
G	GAS	DN40-PN6
SC	CONDENSATE DRAIN	Ø 40
S	FLUE OUTLET	Ø 80
EL	ELECTRICAL CABLES PASSAGE POINTS	Ø 40

1.1.8. HEAD/FLOW DIAGRAM

CIRCULATOR

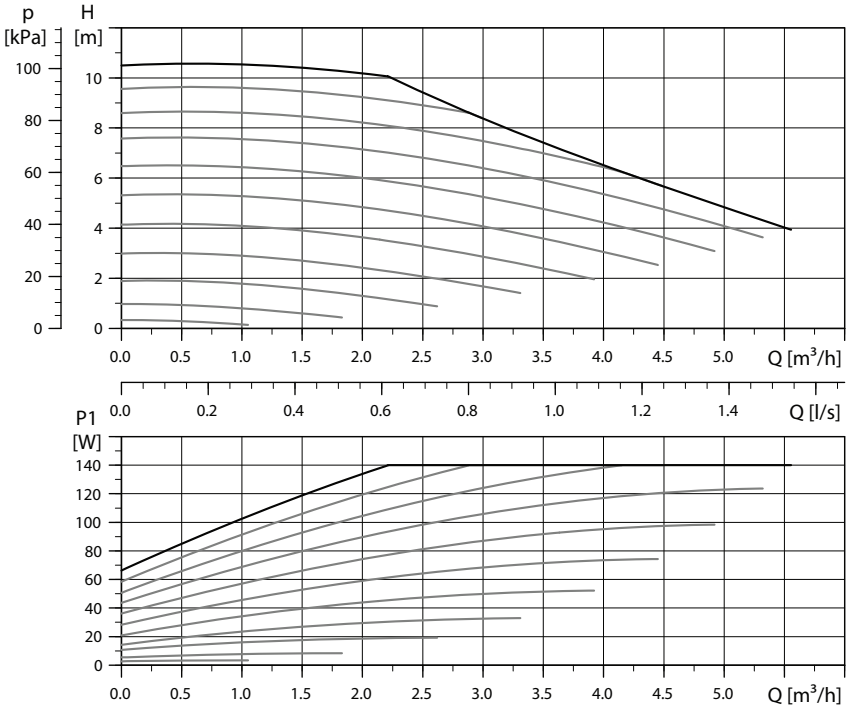

fig. 1

INDIVIDUAL BOILER

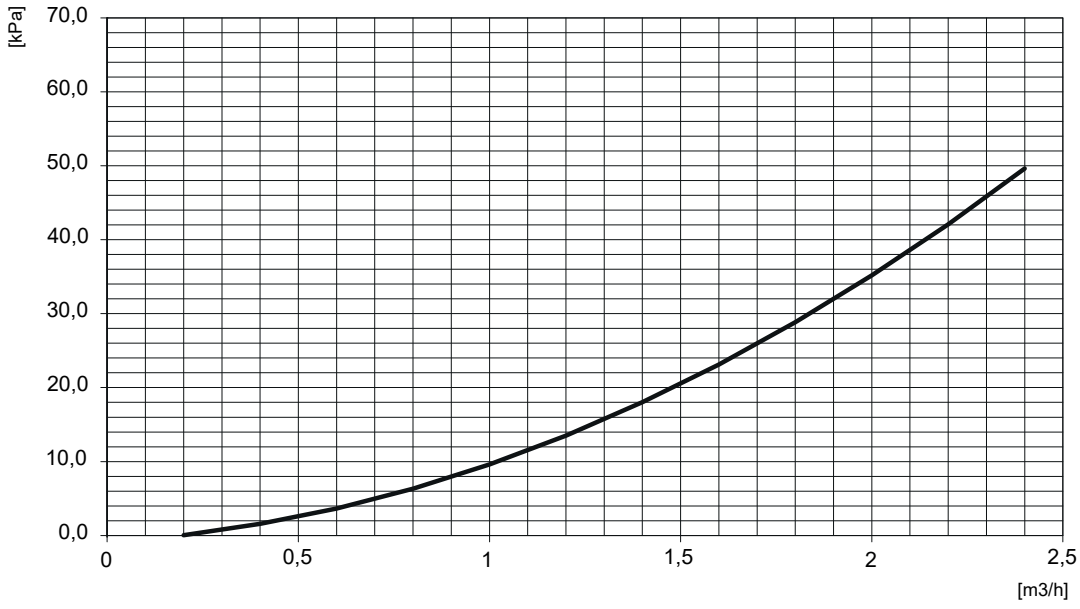

fig. 2

1.1.9. SYSTEM ACCESSORIES

HYDRAULIC COMPENSATOR

In order to guarantee a regular boiler functioning by avoiding scarce capacity's problems (due to obstructed radiators or impurieties), the installation of a hydraulic compensator is strictly necessary or, as alternative, the installation of a heat exchanger able to separate the hydraulic circuit.

The choice of a hydraulic compensator rather than another, exclusively depends on the type of the system.

The installation of a hydraulic compensator is recommended in case of a new system or a boiler replacement where a pipes flushing is possible. (fig. 1).

The compensator will create a low pressure loss zone so that

the primary circuit (of the boiler) will become independent from the secondary circuit. Therefore the installation of the hydraulic compensator allows a constant flow rate circuit and a variable flow rate distribution circuit, typical conditions of the modern heating systems.

A particular attention must be reserved, during the planning phase, to the possible temperature variations that circuits can suffer due to the mixing inducted into the hydraulic compensator. A secondary circuit with a higher capacity than that circulating in the primary circuit creates, through the hydraulic compensator, a heating flow temperature which is lower than the primary circuit temperature.

PLATE EXCHANGER

In case of a standard boiler's replacement in an old system with impurities and in case of problems during the system flushing, the installation of a heat exchanger is recommended to prevent boiler's obstructions that might compromise its functioning. The heat exchanger, interface between the primary circuit which includes the boiler and the secondary circuit, guarantees a real separation of thermal carriers flows and the consequently boiler safeguard. Unfortunately in this case, a real separation of flows provokes a real output loss from the system.

BOX 100 COMPACT.

Empty container module composed of an epoxy powder coated steel container module and an ABS top protection cap complete with insulation consisting of a class 0 insulating mat in reaction to fire. The module is designed to house system accessories such as distribution manifold, distribution circulator, expansion vessel, etc.

1.1.10. INSTALLING THE BOILER

MINIMUM DISTANCES

In order to allow the access inside the boiler for maintenance operations, you have to respect the minimum technical spaces indicated in figure 1.

ATTENTION

In boiler installation, follow the instructions given for installation. Incorrect slopes of the device would cause the incorrect flow of condensate through the discharge duct with the consequent stagnation of condensate inside the boiler ..

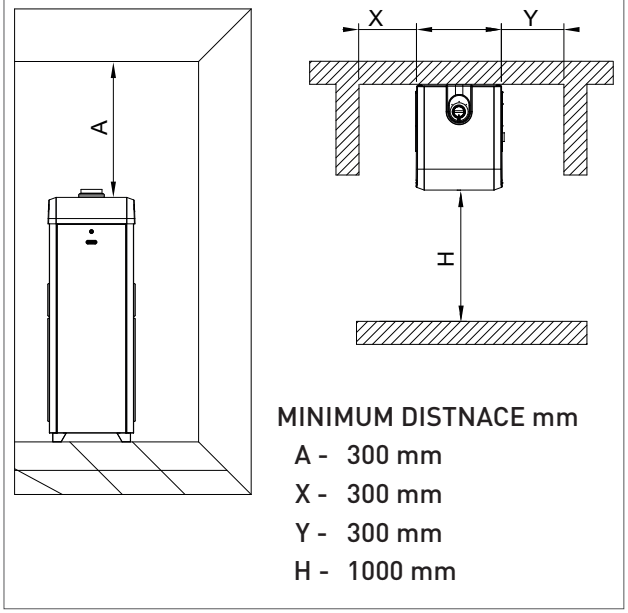

MINIMUM DISTNACE mm

A - 300 mm

X - 300 mm

Y - 300 mm

H - 1000 mm

fig.1

1.1.11. HYDRAULIC CONNECTION

DANGER

Make sure that the tubes of the water and heating plant are not used as grounding system for the electrical plant. There are not suitable for such use.

WARNING

To prevent voiding the warranty and to ensure the proper operation of the boiler, please wash the plant (if possible when hot) with suitable pickling or descaling solutions in order to remove the impurities coming from tubes and radiators.

WARNING

When connecting the equipment to water supply, avoid excessive bending and recovery operations from any off axis positioning that may damage the tubes causing leaks, malfunction or early wear.

WARNING

In order to avoid any vibrations and noises, do not use tubes with small diameters or elbows with small radius and significant cut-off of the passage sections.

WARNING

Connect the outlets of safety valves, three-ways valves (if present) and of the cylinder (if present) to an outlet funnel, to prevent the boiler room from flooding if these devices cut in. This outlet should preferably be sent to the outside so as to avoid damage to persons or property caused by hot water in the event that the valve should open. The manufacturer is not responsible for any flooding due to the opening of the safety valve in case of system overpressure.

WARNING

On systems with a closed expansion tank, the pressure reducer on the automatic supply unit (where available) should be set to a pressure that will not exceed the initial design setting. Make sure that while the equipment is working the system pressure does not exceed the working pressure for each component.

WARNING

Ensure that, during the boiler operation, the system pressure doesn't exceed the working pressure of each component.

WARNING

In order to prevent scales or deposits on the primary heat exchanger, the heating/D.H.W circuit inlet water must be treated according to the current regulations.

It is however suggested to treat the water:

› for the heating circuit, over 25 French degrees, by means of chemical conditioning treatment for powers ← 100 kW or sweetening for powers → 100 kW.

› for the D.H.W, over 15 French degrees, by means of chemical conditioning treatment for powers ← 100 kW or sweetening for powers → 100 kW.

It is also necessary to install a safety filter to protect the system.

WARNING

In case the boiler is installed as part of a low temperature circuit, please install a safety thermostat on the heating flow, which can stop the boiler activity in case of high heating flow temperature. The company assumes no liability for damage caused to persons or for failure to comply with these instructions.

1.1.12. CHARACTERISTICS OF THE WATER OF THE SYSTEM

For a correct operation of the system, it is necessary to make sure that:

1. The system does not present losses or that the most obvious are at least eliminated;

2. If an automatic filling system is present, a litre meter must be installed in order to precisely know the extent of any losses;

3. The filling in of the system and the top ups are performed with softened water in order to reduce the total hardness. The water must also be treated in order to maintain the pH within the provided threshold so as to avoid corrosion phenomena.

4. Either on new systems or on replacements, the system must be fitted with efficient systems which ensure the elimination of the air and impurities: Y filters, micro impurity separators and micro bubbles of air separators;

5. Avoid draining the water of the system during the routine maintenance even if it is about apparently insignificant quantities: for example, in order to clean the filters, provide the system with adequate shut-off valves;

6. Always perform an analysis of the water of the system before opening the communication between the new generator and the system, in order to establish if the parameters present in the water indicate the need to fully drain the system, to use the water already present in the system or to chemically wash the system using utility water adding a detergent when it is suspected that the system might be dirty or particularly clogged and at the next loading with new treated water.

Water treatment

In order to preserve the integrity of the water-fume exchanger and to guarantee optimal thermal exchanges, it is necessary that the water of the primary circuit, circulating inside the exchanger of the condensate boiler, has the characteristics defined and constant in time. To obtain this, it is fundamental to perform a series of system preparation and maintenance operations such as:

• washing the system;

• check the characteristics of the water of the system;

The type of treatment to be performed will be chosen based on the characteristics of the water to treat, of the type of system and on the requested purity limits

Oxygen

A certain amount of oxygen always enters the system, both during the filling phase and during the use in case of reintegration or presence of hydraulic components without oxygen barriers. The reaction between the oxygen and the stainless steel creates corrosion and forms sludge. While the water fume exchanger is made of stainless steel, and therefore it is not subject to corrosion, the sludge created in the carbon steel system is deposited in the warm points, including the exchanger. This has the effect to reduce the heat capacity and thermally insulate the active parts of the exchanger, which might cause damages.

The precautions to limit the phenomena are:

- Mechanical systems: a deaerator combined with a sludge remover, correctly installed, reduce the quantity of oxygen circulating inside the system.

- Chemical systems: the additives allow the oxygen to dissolve in water.

Hardness

The filling and make-up water hardness brings a certain amount of limestone into the system. It attacks the warm parts of the exchanger, thus creating load losses and thermal insulation losses on the active parts. This phenomena can cause damages.

The filling and make-up water of the system, if it does not fall under the values indicated below, should be softened. Moreover, additives can be added in order to maintain the limestone into the solution. The hardness must be periodically checked and registered.

Acidity	7 < pH < 8.5	
Conductivity	< 400	µs/cm (at 25°C)
Chlorides	< 125	mg/l
Iron	< 0.5	mg/l
Copper	< 0.1	mg/l

If the above indicated limits are exceeded, a water must be chemically treated.

The type of treatment to be performed will be chosen based on the characteristics of the water to treat, of the type of system and on the requested purity limits.

1.1.13. SYSTEM FILLING

WARNING

For system filling use only clean tap water. In order to prevent limestone build-up and damages to the domestic water heat exchanger, the hardness of the domestic supply water should not exceed 15° Fr. However, please check the characteristics of the water used and install suitable treating devices.

WARNING

If the system is filled by adding ethylene glycol-type chemical agents you have to install on the loading system a hydraulic trip unit in order to separate the heating circuit from the domestic circuit.

Before powering up the boiler, fill the system as follows:

1. slightly loosen the cap of the jolly valve placed on the top of the condensing block to release the air form the top of the system (1-fig.1);
2. check that the jolly valves vent the air present in the system are not blocked;
3. connect a rubber pipe to the draining tap placed on top of the condensing heat exchanger (2-fig.1);
4. open the general domestic water input tap and load the system by exhaling all the air;
5. use pressure gauge present in the system to make sure that the system pressure reaches the design value;
6. after performing this operation, make sure that the loading tap is properly closed.
7. Open the air relief valves of the radiators and check the air removal process. When the water starts to leak close the radiators air relief valves.
8. If after performing these operations you observe a decrease of the water pressure inside the system, open once again the loading tap until the pressure gauge reaches the design pressure.

fig. 1

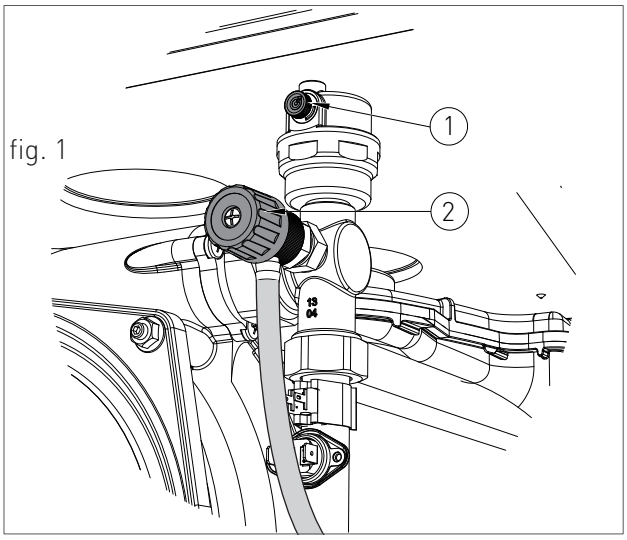

1.1.14. CONDENSATE DRAIN

FILLING THE CONDENSATE DRAIN SIPHON

Before starting the boiler you have to fill the condensate collection siphon in order to avoid fuel reflux through the siphon.

Fill the condensate collection siphon as follows:

› Unscrew the screw "P" (fig. 1), extract the siphon and fill it with water up to the highest point "T" (fig. 1);

› Connect the adequately prepared flexible condensate drain tube to a disposal system (it is necessary to neutralise the condensate if the material out of which the canal system where the condensate arrives is composed presents a corrosion risk; please see paragraph 'CONDENSATE NEUTRALISER'). The condensate can be drained directly in the sewerage system by inserting an easily serviceable siphon.

WARNING

After the first months of operation of the device, it is recommended to clean the condensate collection siphon from any deposits deriving from the first transit of the condensate inside the technical components of the boiler. Such deposits might cause a malfunction of the siphon.

CONDENSATE DRAIN

The boiler produces a significant quantity of condensate during operation. This condensate has an acid pH of 3-5. Observe the national standard in force and the local regulations for the disposal of the condensate produced by the boiler.

The designer, according to the power of the system and the intended use of the building, is bound to evaluate the acceptance of systems in order to neutralise the acid condensate.

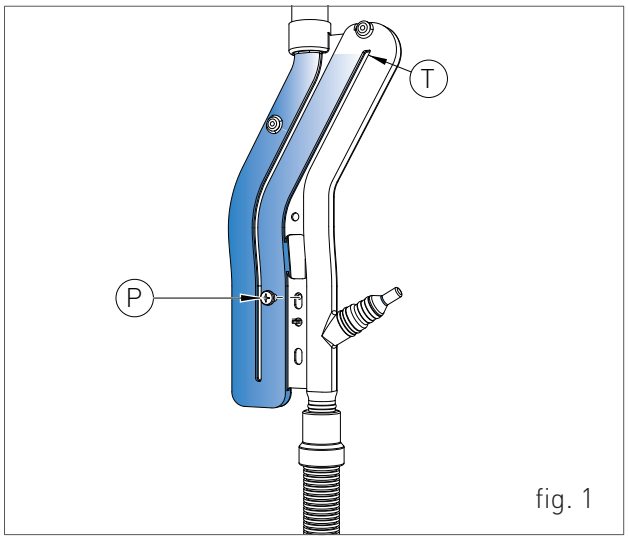

fig. 1

The system must be performed so as to avoid the freezing of the condensate. Before putting into operation the device, check the correct evacuation of the condensate.

WARNING

Before connecting the condensate collection siphon to the drain tube, check that the slope of the boiler is ensured according to the indications from chapter 'INSTALLATION OF THE BOILER'.

WARNING

Correctly connect the condensate collection siphon of the boiler to a draining system by adding the slope to the drain of the condensate of the fume exhaust duct. Where possible, it is recommended to perform such connection by means of a collection glass in order to check the correct discharge of the condensate avoiding stagnations that might cause dangerous returns of the condensate to the boiler.

In order to connect the condensate draining to the draining system, use only corrosion-resistant materials with an adequate diameter.

CONDENSATE NEUTRALISER

Assemble the condensate neutralisation box, fitted with granulate and active carbons for a treated power up to 350 kW (see fig.2). The device allows neutralising the condensate which is collected inside the boiler and/or in the fume discharge systems made of stainless steel, plastic, glass or ceramic.

The acid condensate, inserted into the neutralisation box, follows a mandatory path for two phases; the first one, filtration of nitrates and sulphates by means of active carbons contained in the first tube line, in the second one, the pH is increased.

The acidity of the condensate can be checked by using litmus paper in order to determine the pH. Then, the neutralised condensate can be transported into the sewage system.

MAINTENANCE

The pH parameters must be comprised between < 7 and 8.5 >.

Every six months, it is necessary to establish the PH of the treated condensate inside the neutraliser. Immerse a litmus paper (or a suitable digital tool) in the condensate near the tapped draining connection for about 2 seconds and thus lay it on a white paper. After about 30 seconds, it is possible to compare with the coloured scale. The neutral point is on the value 6.8-7; at a lower value, the condensate is acid, at a higher value, it is base].

If necessary, replace the active carbon and the reagent granulate.

fig. 2

1.1.15. ANTI-FREEZE PROTECTION

The boiler is protected against freezing thanks to the electronic board preparation with functions that start the burner and heat the concerned parts when their temperature goes below the minimum pre-set values, protecting the boiler up to an external temperature of -10 °C.

The device starts when the hot water temperature goes below 8 °C, automatically starting the burner until the heating flow water temperature reaches the 30°C and, in presence of a return sensor, until the heating return water temperature reaches the 20°C.

The system starts even if on the display appears "OFF", as long as the boiler is connected to the power (230 V) and gas supply.

For long periods of standby, please empty the boiler and the plant.

If the temperature goes below -10° centigrades, please fill the plant with anti-freeze liquid (CLEANPASS FLUIDO AG cod. 98716LA) and insert and electrical resistances kit (cod. 82259LP).

DILUTION PERCENTAGE OF CLEANPASS FLUIDO AG

ANTIFREEZE - ETHYLENE GLYCOL (%) VOLUME	TEMPERATURE FREEZING POINT (°C)
20	-7.5
30	-13
35	-18
40	- 22.5
45	-28
50	-33.5
55	-42
60	-50

RECOMMENDED MINIMUM PERCENTAGE OF GLYCOL : 20 %

1.1.16. GAS CONNECTION

DANGER

In order to connect the gas connector of the boiler to the supply pipe use a stop seal of an appropriate size and material. The use of hemp, teflon tape or similar materials is strictly forbidden.

BEFORE PERFORMING THE GAS CONNECTION, MAKE SURE THAT:

› please make sure the gas supply to the boiler is equipped with an interception tap, located underneath the boiler itself and approved as per the applicable regulations.

› the gas adduction line complies with the standards and regulations in force;

› the tubing's section suits the requested capacity and its length;

› the tubing is equipped with all safety and control devices required by the standards in force;

› the internal and external seals of the gas infeed plant are checked;

› the device is suitable for use with the type of gas available by checking the boiler data plate (placed on the inner side of the front casing. If they do not match you must take the necessary measures to adapt the boiler to another type of gas (see chapter GAS TRANSFORMATION);

› the gas supply pressure falls within the values indicated on the data plate.

1.1.17. ELECTRICAL CONNECTION

DANGER

The equipment is electrically safe only if it is properly connected to an efficient grounding system, performed in compliance with the safety standards in force. You should check this essential safety requirement. If in doubt, request an accurate check of the electrical system performed by qualified staff, as the manufacturer is not responsible for any damages caused by lack of grounding system.

› Make sure that the electrical systems is suitable for the maximum power absorbed by the equipment, value indicated on the data plate.

› make sure that the cables section is appropriate for the maximum power absorbed by the equipment and that it is however not lower than 1 mm^2.

› The equipment works with alternating current of 230 V and 50 Hz. The electrical connection must be performed using an all-pole switch with an opening of at least 3 millimetres between contacts placed upstream from the device.

WARNING

Make sure that the phase and neutral cables connection is performed in compliance with the wiring diagram (see chapter POWER SUPPLY).

WARNING

It is strictly forbidden the use of adaptors, multiple plugs and/or extensions for the general power supply of the equipment from the electrical network.

1.1.18. POWER SUPPLY

To power the boiler connect the electrical cables to the terminal inside the control panel as follows:

DANGER

Cut off the voltage from the main switch.

› remove the boiler's front casing (refer to chapter ACCESSING THE BOILER
› access the terminal box of the electrical connection box and proceed with the electrical connection as shown in the wiring diagram;

After performing these operations, remount the front casing.

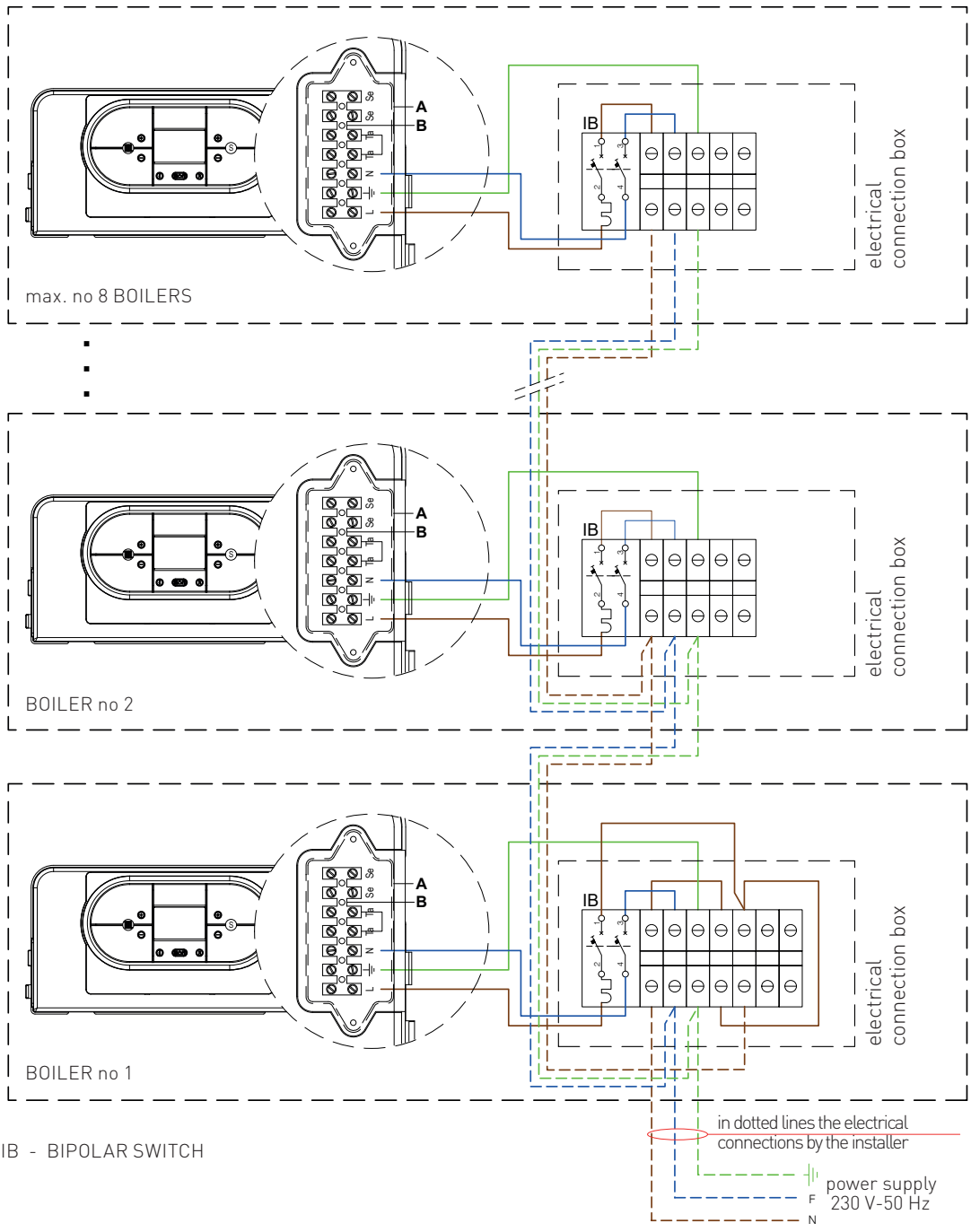

fig. 1

IB - BIPOLAR SWITCH

1.1.19. MODBUS - CASCADE SYSTEM CONTROL UNIT CONNECTION

To connect the Modbus line to the cascade system control unit, proceed with the electrical connections as follows:

DANGER

Cut off the voltage from the main switch.

› remove the boiler's front casing (refer to chapter ACCESSING THE BOILER
› access the electrical connections box;
› access the terminal board box and proceed with the electrical connections as shown in the wiring diagram;

Once the operation is complete, close the box.

NOTE The Bus signal connections (between 2A 2B of the control unit and A B of the ModBus OT converter), must be made using a shielded cable (recommended Belden 9841 AVG 22 cable, according to standard RS485).

Make sure that these connections are in no way in the same conduit/corrugated tube as the 220V wires,

since there may be interferences which would make the correct operation of the converters themselves and of the control unit difficult/impossible. Therefore, leave a passage for the Bus signal connections.

In case of Solar pcb installation, this pcb must be power supplied at 24VDc.

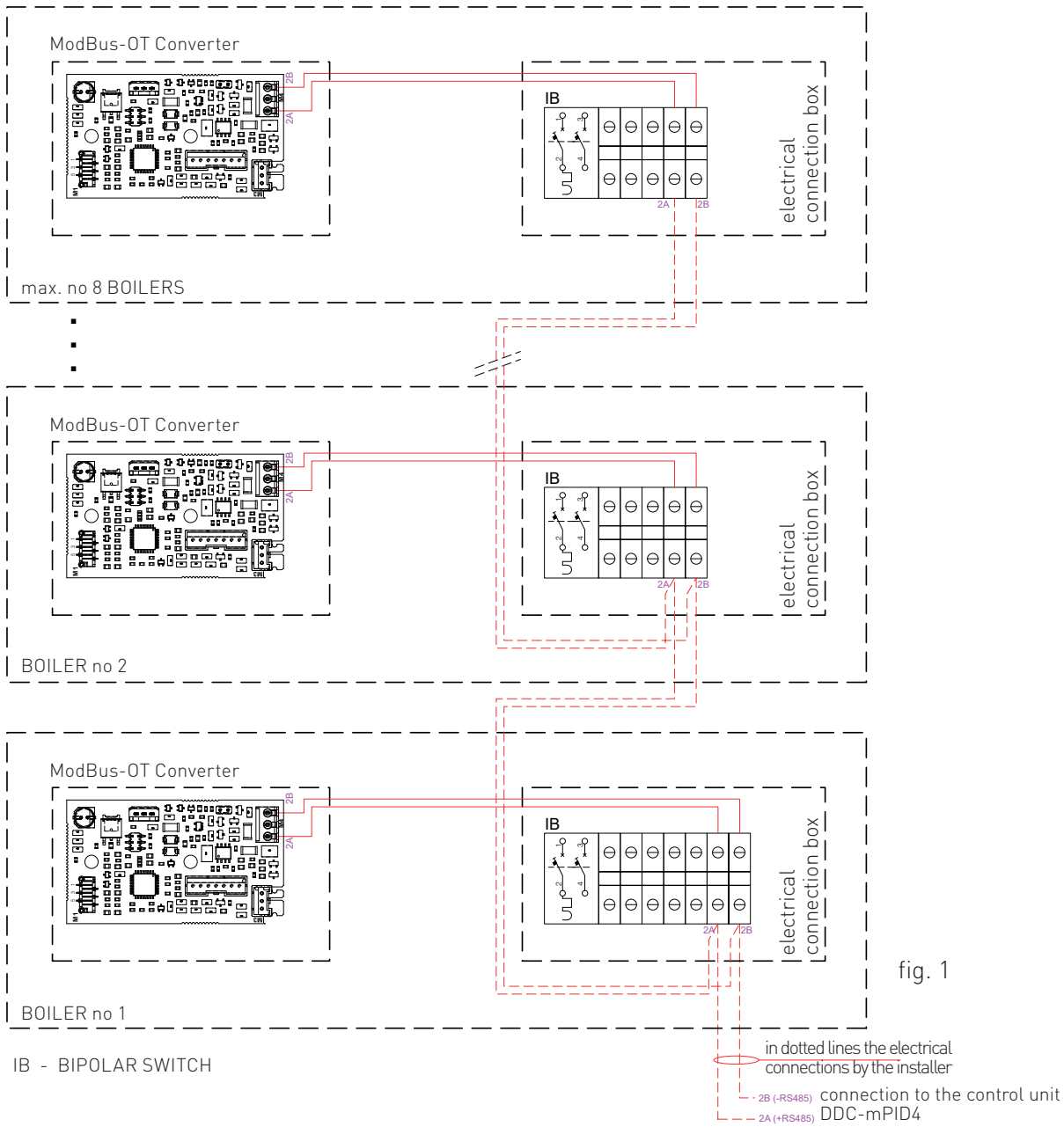

fig. 1

To wire the optionals below:

• (TP) EXCLUSION OF THE D.H.W. OR HEATING CIRCUIT VIA CLEAN CONTACT (SEE EXPLANATION IN THE PARAGRAPH 'EXCLUSION VIA CONTACT (TP)')

•(CT) TELEPHONE DIALER OR AIR PRESSURESWITCH (SEE CONTACT MANAGEMENT IN THE PARAMETER P36)

• BUS 0-10V

• (SVZ) CONTROL BOARD FOR AREA VALVES AND AUXILIARY RELAY CONNECTED TO A REMOTE CONTROL COD. 65-00030

• (AG) AUXILIARY RELAY FOR GENERIC DEVICE. MAXIMUM CURRENT 3A WITH 250VAC (SEE RELAY MANAGEMENT AT PARAMETER P34)

use the electronic board placed inside the control panel as follows:

DANGER
Cut off the voltage from the main switch.

› remove the boiler's front casing (refer to chapter ACCESSING THE BOILER).

› remove the crankcase of the control panel (see chapter ACCESSING THE ELECTRONIC BOARD).

› after removing the crankcase, connect the items below to the electronic board (see fig. 1):

After performing these operations, remount the crankcase and the front casing.

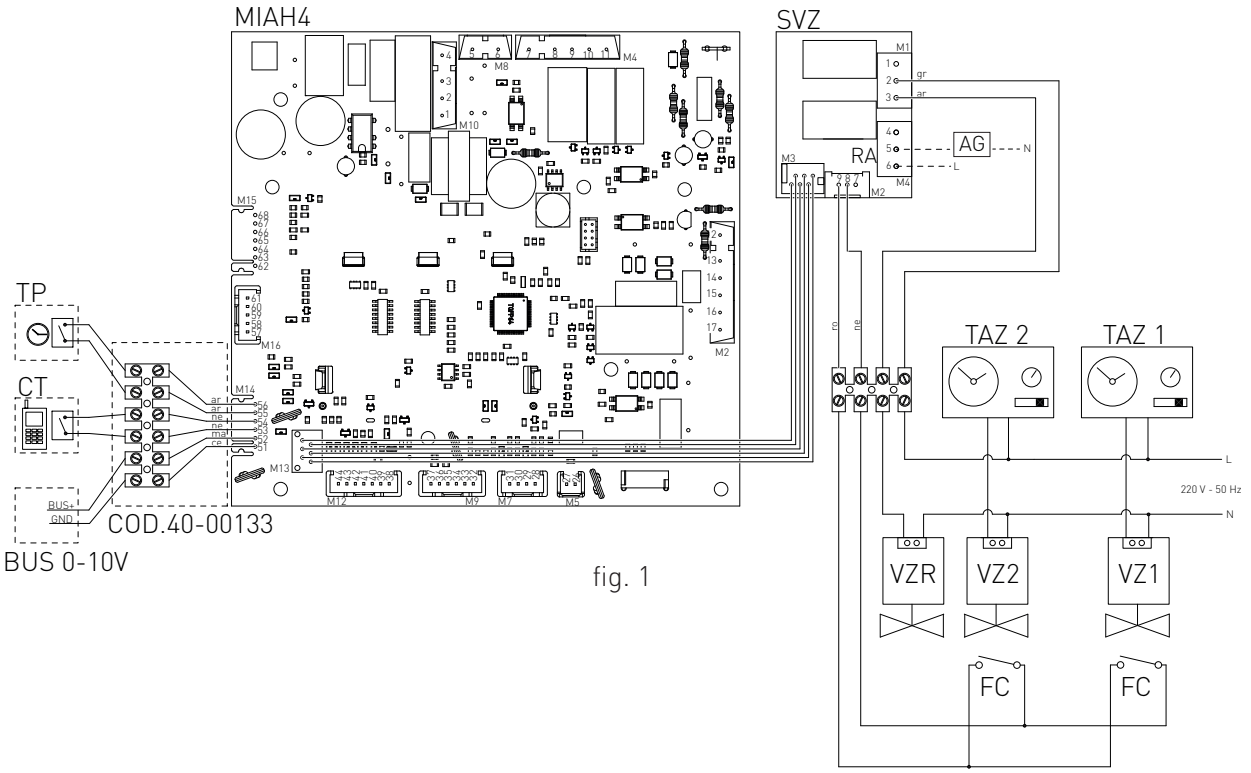

fig. 1

RA:	AUXILIARY RELAY
TAZ1:	ENVIRONMENT THERMOSTAT AREA 1
TAZ 2:	ENVIRONMENT THERMOSTAT AREA 2
VZ1:	AREA 1 VALVE
VZ2:	AREA 2 VALVE
VZR:	REMOTE CONTROLLED AREA VALVE
FC:	AREA VALVES LIMIT SWITCH
GR:	GREY
AR:	ORANGE
NE:	BLACK
MA:	BROWN
CE:	LIGHT BLUE
RO:	RED

EXCLUSION VIA CONTACT (TP)

In case there is a tank clock or a temperature thermostat connected on contacts n.55-56 of the M14 terminal board on the P.C.B., when the contact (TP) is closed, one of the following functions or requests can be excluded:

FAST H2O FUNCTION – if parameter P01 value is set to '0' or '1' (see chapter 'DIGITECH CS PARAMETERS TABLE') and FAST H2O function is active, the function is deactivated when closing the contact.

D.H.W. REQUEST – if parameter P01 value is set to '0' or '1' and parameter P17 value is set to '1' (see chapter 'DIGITECH CS PARAMETERS TABLE'), the burner ignition request in D.H.W. mode is disabled, when closing the contact. If FAST H2O function is active, the function is deactivated when closing the contact.

TANK RESTORATION – if parameter P01 value is set to '2' or '3' (see chapter 'DIGITECH CS PARAMETERS TABLE'), the tank restoration function is deactivated, when closing the contact. Upon D.H.W. request through flow-switch, the boiler activates in instantaneous mode.

HEATING REQUEST – if parameter P01 value is set to '5' (see chapter 'DIGITECH CS PARAMETERS TABLE'), the burner ignition request in heating mode is disabled, when closing the contact (even if the request comes from a connected room thermostat or remote control).

1.1.20. FUME EXHAUST FITTINGS

WARNING

In order to ensure proper operation and efficiency of the device you have to connect the boiler fume exhaust fitting to the fume exhaust duct using appropriate polypropylene flue fittings for condensing boilers. It is recommended to install discharge systems approved by Aleabrax Systems.

› For all discharge ducts, with regard to the fumes path, you should provide an uphill slope (outwards) so as to favour the reflux of the condensate towards the combustion chamber, suitably realized to collect and drain acid condensate.

› In order to discharge the fumes through a fumes exhaust duct carefully follow the technical standards in force.

› Suction and discharge systems, tailored to individual installations, must be protected with accessories that prevent the ingress of foreign objects and atmospheric agents.

INSTALLATION REQUIREMENTS

For Australia – refer to AS/NZS 5601 and local authority for minimum clearances as illustrated below:

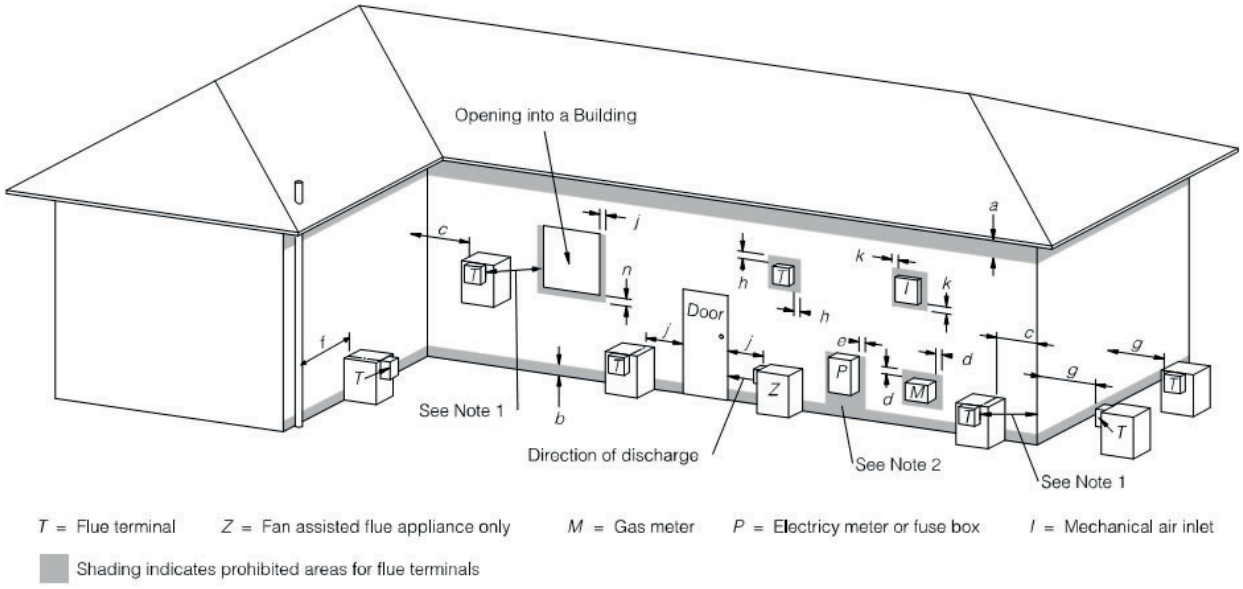

MINIMUM CLEARANCES REQUIRED FOR *BALANCED LUE* TERMINALS, FAN-ASSISTED *FLUE TERMINALS*, ROOM–SEALED APPLIANCE TERMINALS OR THE TERMINALS OF OUTDOOR APPLIANCES

1.1.21. TYPES OF FUME EXHAUST SYSTEMS

STAINLESS STEEL VERTICAL FLUE WITH TERMINAL

It allows fumes discharge directly from roof and draws air from atmosphere.

pos	code	description
1	50-00377	STAINLESS STEEL VERTICAL FLUE KIT Ø80 W/FLUE TERMINAL

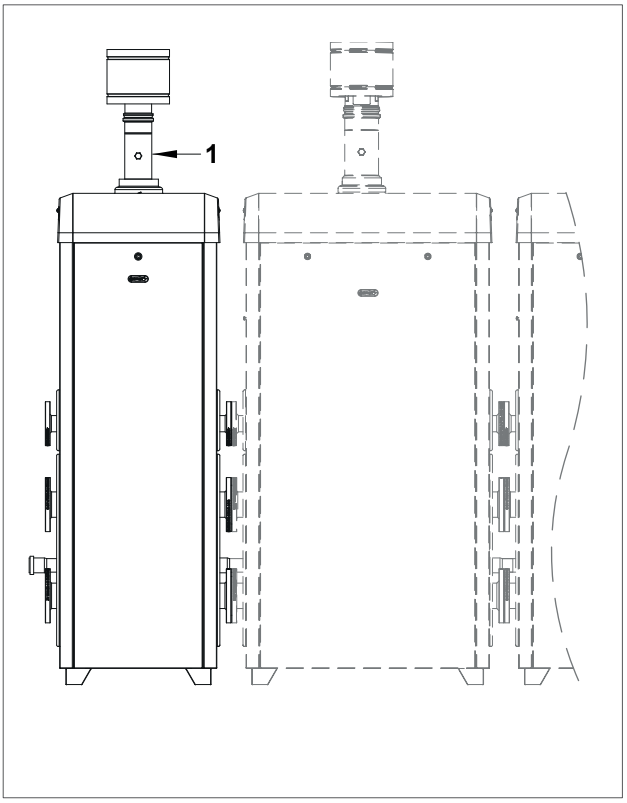

fig.1

2. SUPPORT CENTRE SECTION

All operations described below relative to first start-up, maintenance and replacement should be performed only by qualified personnel and authorized by Aleabrax Systems.

2.1. FIRST START-UP

2.1.1. PRELIMINARY OPERATIONS FOR FIRST START-UP

The first start-up operations consist in checking the correct installation, adjustment and operation of the device. Proceed as follows:

- check the inner system sealing in accordance with the indications provided by standard and regulations in forced;
- check if the gas used is suitable for the boiler;
- check if the gas capacity and relative pressures comply with those on the plate;
- check the intervention of the safety device in case of lack of gas;
- make sure that the device supply voltage corresponds with that on the plate (230 V – 50 Hz) and that the wiring is correct;
- make sure that the grounding system works properly;
- make sure that the combustion air adduction and fumes and condensate discharge take place properly in compliance with the Local and National Laws and Standards in force;
- make sure that the fumes discharge tube and its connection to the fume exhaust duct comply with the requirements of the Local and National Laws and Standards;
- make sure that the heating system gate valves are open;
- make sure that there is no intake of gaseous products within the system;
- make sure that there are no flammable liquids or materials near the device;
- open the boiler gas tap and make sure that there are no gas leaks upstream from the device (the burner gas connection must be checked while the machine is running);
- in case of new installation of the gas supply network, the air inside the tubes may block the device at its first start-up. You might have to repeat the start-up procedure to purge all the air inside the tube.

2.1.2. BOILER COMMISSIONING

WARNING

Make sure that the system is correctly filled.

Proceed with boiler commissioning as follows:

Make sure the gas feed valve is switched off

› Power the boiler.

THE START-UP SYSTEM WILL AUTOMATICALLY ACTIVATE THE SYSTEM AIR RELIEF CYCLE FUNCTION DISPLAYED ON SCREEN WITH CODE "F33" (ONLY AT FIRST START-UP WILL LAST FOR 5 MINUTES*). When function "F33" is active, the pump is enabled and the burner start-up request is disabled. The boiler can work normally only after completing the operation.

› Make sure the circulating pump is unblocked.

› If it should be blocked, wait for the circulating pump to activate the automatic reset (lasting 3 min.)

› If the circulating pump should be still blocked, activate the circulating pump automatic reset again (further 3 minutes), and switch off the power supply and switch it on again.

› Open the gas tap.

› Use the button ' ' to select the desired operation mode. If the symbol is displayed fixed, it means that the function has been activated.

› The burner will start as soon as the thermostat contact is closed ;

› If the flame is missing, the board will repeat the start-up operations after post-ventilation (20 seconds).

› You might have to repeat the start-up operation several times to release all the air inside the gas tube. Before repeating the operation, wait at least 5 seconds from the last start-up attempt and unlock the boiler from "E01" error code by pressing the Reset '®' key.

(*) The boiler performs the system venting cycle function (5 minutes) only during the first starting. After every water pressure reset the boiler will automatically perform a reduced system venting cycle (2 minutes). During this function the display shows F33 code. The correct boiler operation will be allowed only after this operation has been completed.

2.1.3. CO2 VALUE CHECK AND CALIBRATION

WARNING

The CO_2 value should be checked with the casing assembled, while the gas valve should be adjusted with the casing open.

To check and calibrate the CO_2 value to minimum and maximum heating power proceed as follows:

FOR MINIMUM HEATING POWER

› Activate the chimney sweeper function (F07) by keeping pressed the key '(R)' for 7 seconds (the maximum time of this function is 15 minutes).

› Insert the fumes analyser probe in the suitable 'PF' fumes inlet (fig. 1), then make sure that the CO_2 value complies with the requirements indicated in chapter "Technical data", otherwise unscrew the protection screw 'A' (fig. 2) and adjust using a 4 Allen wrench the screw '2' (fig. 2) of the Off-Set adjuster. To increase the CO_2 value, turn the screw clockwise and vice-versa if you want to decrease it. Once completed the adjustment, tighten the protection screw 'A' (fig. 2) on the Off-Set adjuster.

FOR MAXIMUM HEATING POWER

› Press the key '⊕' of the heating temperature setting, to adjust the maximum heating power.

› Make sure that the CO_2 value complies with the indications in "Technical data", otherwise adjust using screw '1' (fig. 2) of the gas flow adjuster. To increase the CO_2 value, turn the screw anti-clockwise and vice-versa if you want to decrease it.

› After each adjustment variation on screw '1' (fig. 2) of the gas flow adjuster you have to wait for the boiler to stabilize itself to the set value (about 30 seconds).

› Press the key '⊖' of the heating temperature setting and make sure that the CO_2 value did not change to minimum, if changed repeat the calibration described in the previous paragraph.

› Deactivate the chimney sweeper function by selecting the OFF mode by using the key '⏻'.

fig. 1

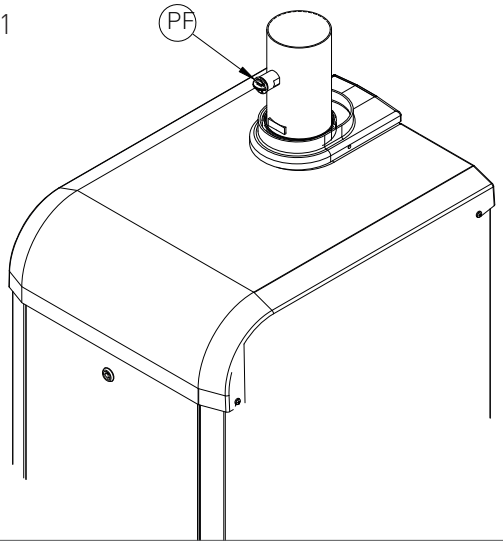

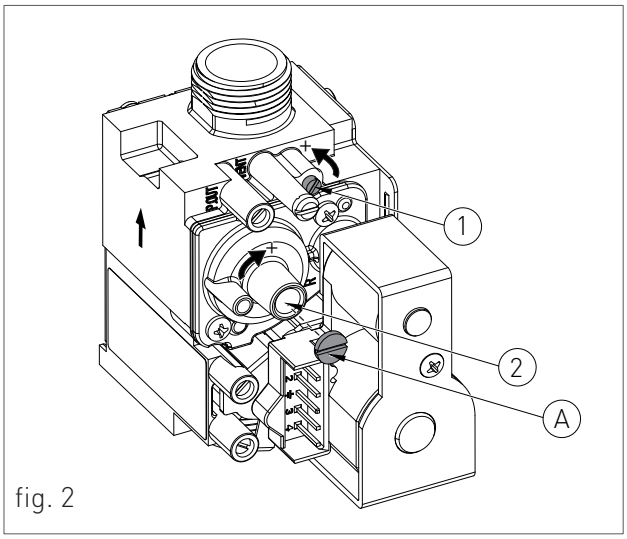

fig. 2

2.1.4. ACCESSING AND PROGRAMMING THE PARAMETERS

To access the parameters menu and adjust their values, follow the procedure below:

1. Press the button '' to select the OFF mode displayed using the symbol ''.

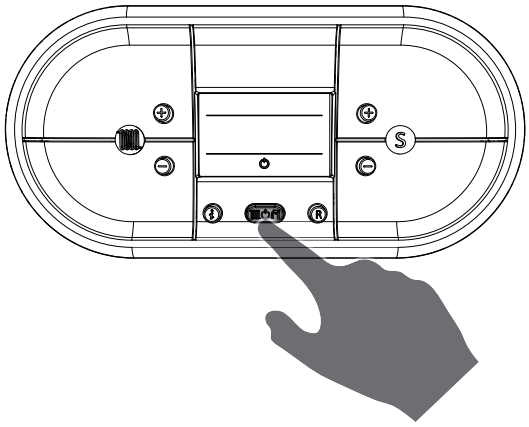

2. Hold at the same time the keys '' and '' until on the display appears the symbol '' with the message 'P00', and release the keys '' and ''.

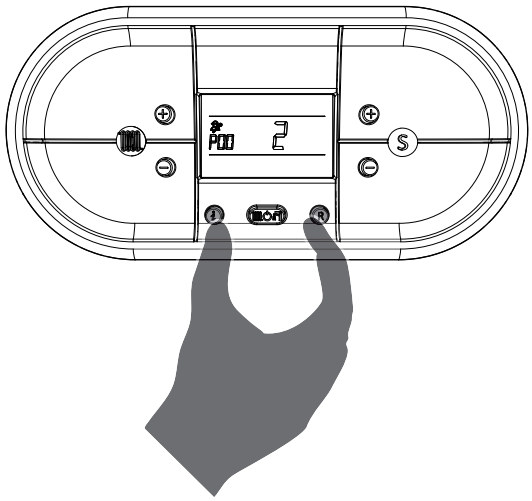

3. Use the keys '' and '' of the heating circuit to select the parameter to be edited.

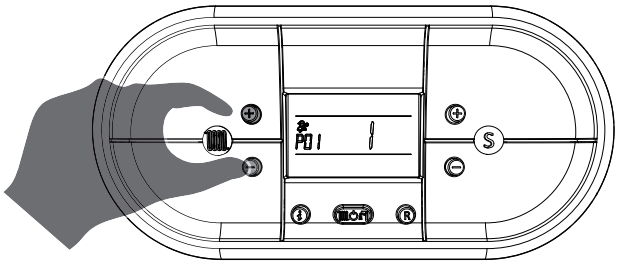

4. Use the keys '⊕' and '⊖' of the symbol 'S' (S) to change the value of the parameter.

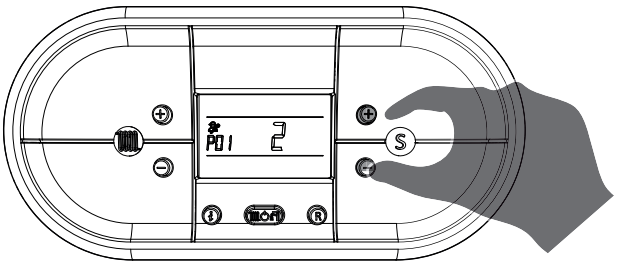

5. Press the key '⏻' to confirm the action and wait for the display to stop blinking, indication of the fact that the adjustment was implemented.

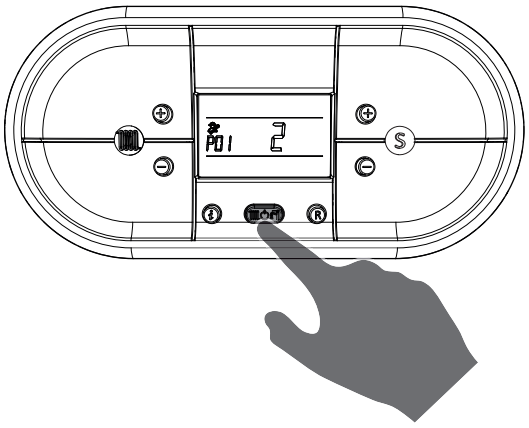

6. To exit the parameters menu, hold at the same time the keys 'ⓘ' and 'Ⓡ' and wait for the symbol '⏻' to appear on the display.

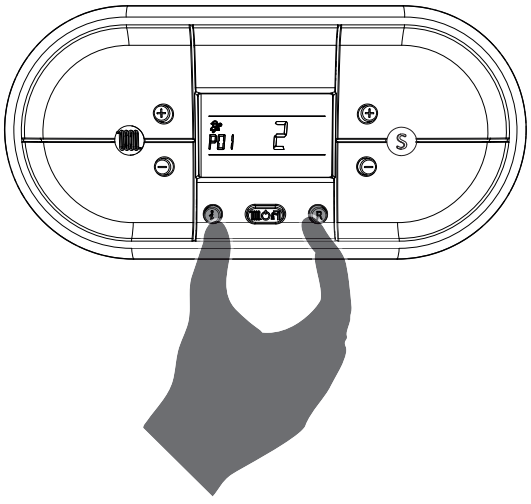

2.1.5. DIGITECH CS PARAMETERS TABLE

PARAMETER	DESCRIPTION	RANGE	FUNCTION
P00	***BOILER MODEL SELECTION***	0 - 11	0 = 13 KW
			1 = 18 KW (HEAT.) / 24 KW (DOMESTIC)
			2 = 25 KW
			3 = 28 KW
			4 = 34 KW
			5 = 55 KW
			6 = 100 KW
			7 = R1K 18_24-R2K 24-R2KA 24 (IN ALL VERSIONS)
			8 = R1K 25_28-R2K 28-R2KA 28 (IN ALL VERSIONS)
			9 = R1K 34-R2K 34-R2KA 34 (IN ALL VERSIONS)
			10 = R1K 50
			11 = R1K 57 / R1K 60
P01	***BOILER TYPE SELECTION***	0 - 5	0 = ISTANTANEOUS R2K
			1 = ISTANTANEOUS RKR
			2 = ACCUMULATION IN THE BOILER
			3 = ACCUMULATION IN THE REMOTE STORAGE TANK
			4 = ISTANTANEOUS COMFORT - FAST H2O
			5 = HEATING ONLY

PARAMETER	DESCRIPTION	RANGE	FUNCTION
P02	***GAS TYPE SELECTION*** ***ATTENTION:*** READ THE INSTRUCTION IN CHAPTER 'GAS CONVERSION' BEFORE CHANGING THIS PARAMETER.	0 - 1	0 = NATURAL GAS 1 = LPG
P03	***SETTING THE HEATING TEMPERATURE*** IN CASE THE BOILER IS INSTALLED AS PART OF A LOW TEMPERATURE CIRCUIT, PLEASE INSTALL A SAFETY THERMOSTAT ON THE HEATING FLOW, WHICH CAN STOP THE BOILER ACTIVITY IN CASE OF HIGH HEATING FLOW TEMPERATURE. THE COMPANY ASSUMES NO LIABILITY FOR DAMAGE CAUSED TO PERSONS OR FOR FAILURE TO COMPLY WITH THESE INSTRUCTIONS.	0 - 1	0 = STANDARD (30-80 °C) (SET BY DEFAULT) 1 = REDUCED (25-45 °C) FOR FLOOR SYSTEMS
P04	***HEATING RUN-UP*** THROUGH THIS PARAMETER YOU CAN SET THE TIME, DURING START-UP PHASE, NECESSARY FOR THE BOILER TO REACH THE MAXIMUM SET POWER (ON THE HEATING SIDE).	0 - 4	0 = (DISABLED) 1 = 50 SECONDS 2 = 100 SECONDS 3 = 200 SECONDS (SET BY DEFAULT) 4 = 400 SECONDS
P05	***ANTI-WATER HAMMER SELECTION*** ONCE THIS FUNCTION IS ENABLED, THE DHW CONTACT WILL BE DELAYED FOR A TIME EQUAL TO THE SET VALUE.	0 - 20	0 = DISABLED 1 - 20 = THE VALUE IS EXPRESSED IN SECONDS
P06	***DOMESTIC CIRCUIT PRESERVATION FUNCTION*** ***(ONLY FOR ISTANTANEOUS BOILERS)*** THROUGH THIS PARAMETER YOU CAN PRESERVE THE CIRCULATOR THE DIVERTER VALVE IN DOMESTIC POSITION FOR A PERIOD OF TIME EQUAL TO THE POST-CIRCULATION (SEE PARAMETER P09), SO AS TO MAINTAIN THE SECONDARY EXCHANGER HOT.	0 - 1	0 = DISABLED (SET BY DEFAULT) 1 = ENABLED
P07	***HEATING TIMING*** THROUGH THIS PARAMETER YOU CAN SET THE MINIMUM TIME FOR WHICH THE BURNER WILL BE TURNED OFF ONCE THE HEATING TEMPERATURE REACHED THE USER SET TEMPERATURE.	0 - 90	VALUE EXPRESSED IN MULTIPLES OF 5 SECONDS (PRE-SET AT 36 X 5 = 180 SECONDS)

PARAMETER	DESCRIPTION	RANGE	FUNCTION
P08	***POST-CIRCULATION HEATING TIMING*** THROUGH THIS PARAMETER, IT IS POSSIBLE TO SET THE OPERATION TIME OF THE PUMP AFTER THE MAIN BURNER TURNS OFF DUE TO THE ENVIRONMENT THERMOSTAT.	0 - 90	VALUE EXPRESSED IN MULTIPLES OF 5 SECONDS (PRE-SET AT 36 X 5 = 180 SECONDS)
P09	***POST-CIRCULATION DOMESTIC / STORAGE TIMING*** THROUGH THIS PARAMETER, IT IS POSSIBLE TO SET THE OPERATION TIME OF THE PUMP AFTER CLOSING THE TAP OR REACHING THE TEMPERATURE SET IN THE BOILER.	0 - 90	VALUE EXPRESSED IN MULTIPLES OF 5 SECONDS (PRE-SET AT 24 X 5 = 120 SECONDS)
P10	***DOMESTIC FAN MINIMUM SPEED ADJUSTMENT*** THROUGH THIS PARAMETER YOU CAN SET THE FAN MINIMUM SPEED IN DOMESTIC PHASE, THAT CORRESPONDS TO THE MINIMUM BURNER POWER DURING A REQUEST TO OPERATE IN DOMESTIC MODE. THE VALUE IS PRE-SET BASED ON THE SET POWER (SEE PARAMETER P00) AND ON THE GAS TYPE (SEE PARAMETER P02)	SEE CHAPTER 'HEAT CAPACITY DIAGRAM (KW) – ELECTRIC FAN FREQUENCY (HZ)'	THE VALUE IS EXPRESSED IN HERTZ (1HZ = 30 RPM)
P11	***DOMESTIC FAN MAXIMUM SPEED ADJUSTMENT*** THROUGH THIS PARAMETER YOU CAN SET THE FAN MAXIMUM SPEED IN DOMESTIC PHASE, THAT CORRESPONDS TO THE MAXIMUM BURNER POWER DURING A REQUEST TO OPERATE IN DOMESTIC MODE. THE VALUE IS PRE-SET BASED ON THE SET POWER (SEE PARAMETER P00) AND ON THE GAS TYPE (SEE PARAMETER P02)	SEE CHAPTER 'HEAT CAPACITY DIAGRAM (KW) – ELECTRIC FAN FREQUENCY (HZ)'	THE VALUE IS EXPRESSED IN HERTZ (1HZ = 30 RPM)
P12	***HEATING FAN MINIMUM SPEED ADJUSTMENT*** THROUGH THIS PARAMETER YOU CAN SET THE FAN MINIMUM SPEED IN HEATING PHASE, THAT CORRESPONDS TO THE MINIMUM BURNER POWER DURING A REQUEST TO OPERATE IN HEATING MODE. THE VALUE IS PRE-SET BASED ON THE SET POWER (SEE PARAMETER P00) AND ON THE GAS TYPE (SEE PARAMETER P02)	SEE CHAPTER 'HEAT CAPACITY DIAGRAM (KW) – ELECTRIC FAN FREQUENCY (HZ)'	THE VALUE IS EXPRESSED IN HERTZ (1HZ = 30 RPM)

PARAMETER	DESCRIPTION	RANGE	FUNCTION
P13	***HEATING FAN MAXIMUM SPEED ADJUSTMENT*** THROUGH THIS PARAMETER YOU CAN SET THE FAN MAXIMUM SPEED IN HEATING PHASE, THAT CORRESPONDS TO THE MAXIMUM BURNER POWER DURING A REQUEST TO OPERATE IN HEATING MODE. THE VALUE IS PRE-SET BASED ON THE SET POWER (SEE PARAMETER P00) AND ON THE GAS TYPE (SEE PARAMETER P02)	SEE CHAPTER 'HEAT CAPACITY DIAGRAM (KW) – ELECTRIC FAN FREQUENCY (HZ)'	THE VALUE IS EXPRESSED IN HERTZ (1HZ = 30 RPM)
P14	***STARTING STEP ADJUSTMENT*** THROUGH THIS PARAMETER YOU CAN SET THE FAN SPEED DURING START-UP THE VALUE IS PRE-SET BASED ON THE SET POWER (SEE PARAMETER P00) AND ON THE GAS TYPE (SEE PARAMETER P02)	SEE CHAPTER 'HEAT CAPACITY DIAGRAM (KW) – ELECTRIC FAN FREQUENCY (HZ)'	THE VALUE IS EXPRESSED IN HERTZ (1HZ = 30 RPM)
P15	***ANTI-LEGIONELLA FUNCTION*** ***(FOR STORAGE BOILERS ONLY)*** THROUGH THIS PARAMETER YOU CAN ACTIVATE/DEACTIVATE THE "ANTILEGIONELLA" HEAT TREATMENT OF THE STORAGE TANK. EVERY 7 DAYS THE WATER TEMPERATURE INSIDE THE STORAGE IS HEATED BEYOND 60 °C THUS GENERATING A BURNING HAZARD. KEEP UNDER CONTROL SUCH DOMESTICH HOT WATER TREATMENT (AND INFORM THE USERS) TO AVOID UNFORSEEABLE DAMAGES TO PERSONS, ANIMALS AND PROPERTY. A THERMOSTATIC VALVE SHOULD BE INSTALLED AT THE DOMESTIC HOT WATER OUTLET TO AVOID ANY BURNS.	0 - 1	0 = DISABLED 1 = ENABLED (PRE-SET BY DEFAULT ON STORAGE BOILERS ONLY)

PARAMETER	DESCRIPTION	RANGE	FUNCTION
P16	***CLIMATE COMPENSATION CURVE*** ***(ONLY WITH EXTERNAL PROBE CONNECTED)*** YOU CAN CONNECT AN EXTERNAL TEMPERATURE PROBE (SEE CHAPTER 'ELECTRICAL CONNECTIONS') THAT AUTOMATICALLY CHANGES THE DELIVERY TEMPERATURE BASED ON THE EXTERNAL MEASURED TEMPERATURE. THE NATURE OF THE CORRECTION DEPENDS ON THE THERMO-ADJUSTMENT VALUE KD SET (SEE CHART). THE SELECTION OF THE CURVE IS DETERMINED BY THE MAXIMUM DELIVERY TEMPERATURE TM AND THE MINIMUM EXTERNAL TEMPERATURE TE TAKING INTO ACCOUNT THE HOUSE INSULATION DEGREE. THE VALUES OF THE DELIVERY TEMPERATURES TM, REFER TO STANDARD SYSTEMS 30-80 °C OR FLOOR SYSTEMS 25-45 °C. THE SYSTEM TYPE CAN BE SET FROM PARAMETER P03.	0 - 30	(SET BY DEFAULT AT 25) THE NUMBERING OF THE VALUE CORRESPONDS TO 'KD' CURVES ON THE CHART (SEE CHART BELOW).

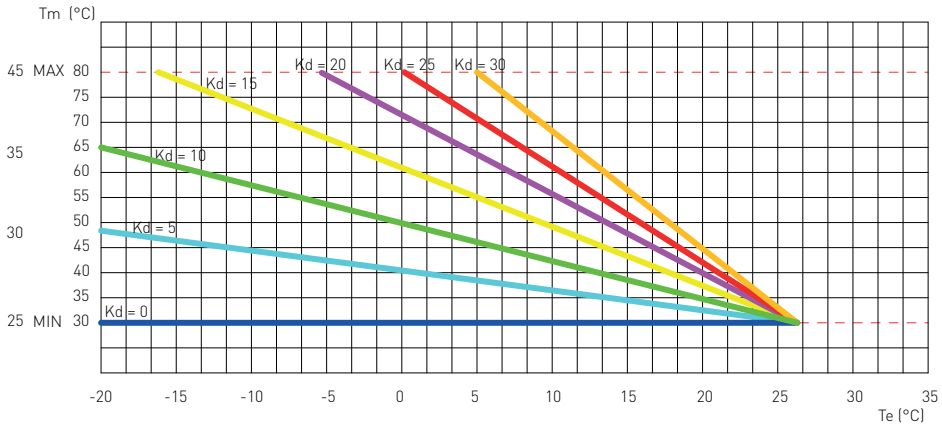

PARAMETER	DESCRIPTION	RANGE	FUNCTION
P17	***DISABLEMENT OF DOMESTIC HOT WATER LINE BY MEANS OF SWITCH (ONLY FOR FAST BOILERS)*** ***(SEE EXCLUSION VIA CONTACT (TP) IN THE CHAPTER "OPTIONAL ELECTRICAL CONNECTIONS")*** BY ENABLING THIS PARAMETER IN THE PRESENCE OF A CONNECTION (FOR EXAMPLE A BOILER CLOCK OR A TEMPERATURE THERMOSTAT) ON BOILER CLOCK SWITCH ON THE BOARD, THE REQUEST FOR BURNER IGNITION ON THE DOMESTIC HOT WATER LINE WILL BE DISABLED UPON BOILER CLOCK SWITCH CLOSURE. ***EXAMPLE 1:*** WITH THE BOILER CLOCK SWITCH OPEN, UPON THE REQUEST FOR DOMESTIC HOT WATER, THE FLOW SWITCH AND THE BOILER WILL TURN ON. ***EXAMPLE 2:*** WITH THE BOILER CLOCK SWITCH CLOSE, UPON THE REQUEST FOR DOMESTIC HOT WATER, THE FLOW SWITCH AND THE BOILER WILL NOT TURN ON.	0 - 1	0 = DISABLED (SET BY DEFAULT) 1 = ENABLED
P18	***ENABLING BUS INDUSTRIAL PILOTING 0 -10V*** THROUGH THIS PARAMETER YOU CAN ENABLE OR DISABLE THE BUS INDUSTRIAL INPUT 0-10 V TO SET THROUGH EXTERNAL BUS THE BURNER POWER OR THE DELIVERY TEMPERATURE.	0 - 2	0 = DISABLED (SET BY DEFAULT) 1 = TEMPERATURE CONTROL MODE 2 = POWER CONTROL MODE
P19	***MINIMUM HEATING SETPOINT*** THROUGH THIS PARAMETER YOU CAN SET THE USER-ADJUSTABLE MINIMUM HEATING TEMPERATURE.	20 - 40	THE VALUE IS EXPRESSED IN °C
P20	***MAXIMUM HEATING SETPOINT*** THROUGH THIS PARAMETER YOU CAN SET THE USER-ADJUSTABLE MAXIMUM HEATING TEMPERATURE.	40 - 90	THE VALUE IS EXPRESSED IN °C
P21	***MAXIMUM DOMESTIC SETPOINT*** THROUGH THIS PARAMETER YOU CAN SET THE USER-ADJUSTABLE MAXIMUM DOMESTIC TEMPERATURE.	45 - 75	THE VALUE IS EXPRESSED IN °C
P22	***SET POINT ΔT DELIVERY-RETURN*** ***(ONLY WITH MODULATING PUMP AND RETURN PROBE CONNECTED)*** THROUGH THIS PARAMETER YOU CAN SET THE TEMPERATURE DIFFERENCE BETWEEN DELIVERY AND RETURN.	0 10 - 40	0 = DISABLED THE VALUE IS EXPRESSED IN °C

PARAMETER	DESCRIPTION	RANGE	FUNCTION
P23	***MODULATING PUMP MINIMUM SPEED*** ***(ONLY WITH MODULATING PUMP AND RETURN PROBE CONNECTED)*** THROUGH THIS PARAMETER YOU CAN SET THE MINIMUM SPEED VALUE OF THE MODULATING PUMP DURING A REQUEST TO OPERATE IN HEATING MODE.	50 - 70	THE VALUE IS EXPRESSED IN PERCENTAGE
P24	***MODULATING PUMP MAXIMUM SPEED*** ***(ONLY WITH MODULATING PUMP AND RETURN PROBE CONNECTED)*** THROUGH THIS PARAMETER YOU CAN SET THE MAXIMUM SPEED VALUE OF THE MODULATING PUMP DURING A REQUEST TO OPERATE IN HEATING MODE.	70 - 100	THE VALUE IS EXPRESSED IN PERCENTAGE
P25	***D.H.W STORAGE TANK TEMPERATURE SETPOINT*** ***(FOR STORAGE BOILERS ONLY)*** THROUGH THIS PARAMETER YOU CAN SET THE PRIORITY STARTING VALUE OF THE STORAGE TANK, COMPARED TO THE USER ADJUSTABLE D.H.W SETPOINT.	3 - 9	THE VALUE IS EXPRESSED IN °C (PRE-SET AT 9°C)
P26	***MODBUS ADDRESS*** BY MEANS OF THIS PARAMETER, IT IS POSSIBLE TO SET THE ADDRESS OF THE BOARD ON MODBUS IN ORDER TO PERFORM A CASCADE SYSTEM.	1 - 16	BOILER NUMBERING FOR MODBUS
P27	***MODBUS COMMUNICATION BAUD RATE*** BY MEANS OF THIS PARAMETER, IT IS POSSIBLE TO SELECT THE MODBUS COMMUNICATION BAUD RATE SUPPORTED BY THE SAME INTERFACE.	0 - 5	0 = 9600 1 = 1200 2 = 2400 3 = 4800 4 = 9600 5 = 19200
P28	***MODBUS MODE***	0 - 2	0 = ENABLED 1 = ENABLED WITH LOCAL SETTINGS 2 = DISABLED (SET BY DEFAULT)

PARAMETER	DESCRIPTION	RANGE	FUNCTION
P29	***ΔT HEATING POSTCIRCULATION*** THROUGH THIS PARAMETER, IT IS POSSIBLE TO SET THE TEMPERATURE DIFFERENCE FROM THE MAIN BURNER SHUTOFF, FOR THE INTERVENTION OF THE ROOM THERMOSTAT, TO THE DISABLING OF THE PUMP IN HEATING MODE.	0 - 25	THE VALUE IS EXPRESSED IN °C (SET BY DEFAULT AT 10 °C)
P30	***ΔT D.H.W./TANK POSTCIRCULATION*** THROUGH THIS PARAMETER, IT IS POSSIBLE TO SET THE TEMPERATURE DIFFERENCE FROM THE CLOSING OF THE TAP OR THE REACHING OF THE TEMPERATURE SET IN THE BOILER TO THE DISABLING OF THE PUMP IN HEATING MODE.	0 - 25	THE VALUE IS EXPRESSED IN °C (SET BY DEFAULT AT 10 °C)
P31	***HEATING MODE ANTI-FREEZE TEMPERATURE SETTING*** THROUGH THIS PARAMETER, IT IS POSSIBLE TO SET THE HEATING WATER TEMPERATURE AT WHICH THE ANTI-FREEZE PROTECTION DEVICE STARTS WORKING.	5 - 12	THE VALUE IS EXPRESSED IN °C (SET BY DEFAULT AT 8 °C)
P32	***ENABLING FLOWMETER*** ***(ONLY WITH FLOWMETER KIT CODE 65-00712 CONNECTED)*** THROUGH THIS PARAMETER IT IS POSSIBLE TO ENABLE THE FLOWMETER FOR MEASURING THE HEATING FLOW RATE AND MANAGE ACTIVATION OF THE BOILER BY THE FLOW RATE ITSELF.	0 - 2	0 = DISABLED (SET BY DEFAULT) 1 = ENABLED 2 = FLOW-SWITCH ENABLING FOR GAS HEAT PUMP (HYBRID BOILER)
P33	***MINIMUM THRESHOLD TO ACTIVATE THE BOILER THROUGH THE FLOWMETER*** ***(ONLY IF PARAMETER P32 IS SET ON THE VALUE '1' OR '2')*** THROUGH THIS PARAMETER IT IS POSSIBLE TO SET THE MINIMUM WATER FLOW RATE REQUIRED TO ACTIVATE THE BOILER.	20 - 68	VALUE EXPRESSED IN HERTZ 20 Hz = 3.5 l/min 23 Hz = 4 l/min 28 Hz = 5 l/min 34 Hz = 6 l/min 39 Hz = 7 l/min 44 Hz = 8 l/min 50 Hz = 9 l/min 55 Hz = 10 l/min 61 Hz = 11 l/min 66 Hz = 12 l/min

PARAMETER	DESCRIPTION	RANGE	FUNCTION
P34	***ACTIVATION OF THE AUXILIARY RELAY ON THE "SVZ" P.C.B. (SEE CHAPTER: OPTIONAL ELECTRICAL CONNECTIONS)*** THROUGH THIS PARAMETER IT IS POSSIBLE TO MANAGE THE TYPE OF FUNCTIONING OF THE AUXILIARY RELAY ON THE "SVZ" P.C.B. (CLAMP M4, PIN 5-6). WHEN THE VALUE OF THE PARAMETER IS SET TO '3', THE ENABLING OR DISABLING OF THE AUXILIARY RELAY IS GIVEN BY THE "TP" CONTACT (CLAMP M14, PIN 55-56, SEE CHAPTER: OPTIONAL ELECTRICAL CONNECTIONS). WHEN THE "TP" CONTACT IS OPEN, THE RELAY STAYS ENERGIZED (WORKING RECIRCULATION PUMP) WHILE WHEN THE "TP" CONTACT IS CLOSED, THE RELAY IS DE-ENERGIZED (NOT WORKING RECIRCULATION PUMP).	0 - 4	0 = DISABLED (SET BY DEFAULT) 1 = HEATING CIRCUIT BOOSTER PUMP 2 = D.H.W. BOOSTER PUMP 3 = RECIRCULATION PUMP 4 = REMOTE LED FOR SIGNALLING BOILER BLOCK (SEE CHAPTER: OPTIONAL ELECTRICAL CONNECTIONS)
P35	***SAFETY CHECK ENABLING FOR INSUFFICIENT CIRCULATION DURING IGNITION*** BY ACTIVATING THIS PARAMETER, THE CORRECT FUNCTIONING OF THE PUMP IS CHECKED AT EACH BURNER IGNITION. THIS CHECK ALLOWS TO PROTECT THE HEAT EXCHANGER AND OTHER PARTS FROM EXCESSIVE NON-DISSIPATED HEAT, IN CASE THE PUMP DOES NOT WORK PROPERLY.	0 - 1	0 = DISABLED 1 = ENABLED (SET BY DEFAULT)
P36	***ACTIVATION AND OPERATING MODE OF THE CONTACT 'CT' THROUGH ACCESSORY COD. 40-00133 (SEE CHAPTER "OPTIONAL ELECTRICAL CONNECTIONS")*** THIS PARAMETER IS AUTOMATICALLY SET TO THE VALUE '1' WHEN THE VALUE OF PARAMETER P00 IS SET TO '11'.	0 - 2	0 = DISABLED (SET BY DEFAULT) 1 = AIR PRESSURE-SWITCH SAFETY 2 = TELEPHONE DIALER

2.1.6. ELECTRIC FAN FREQUENCY/HEAT CAPACITY DIAGRAM

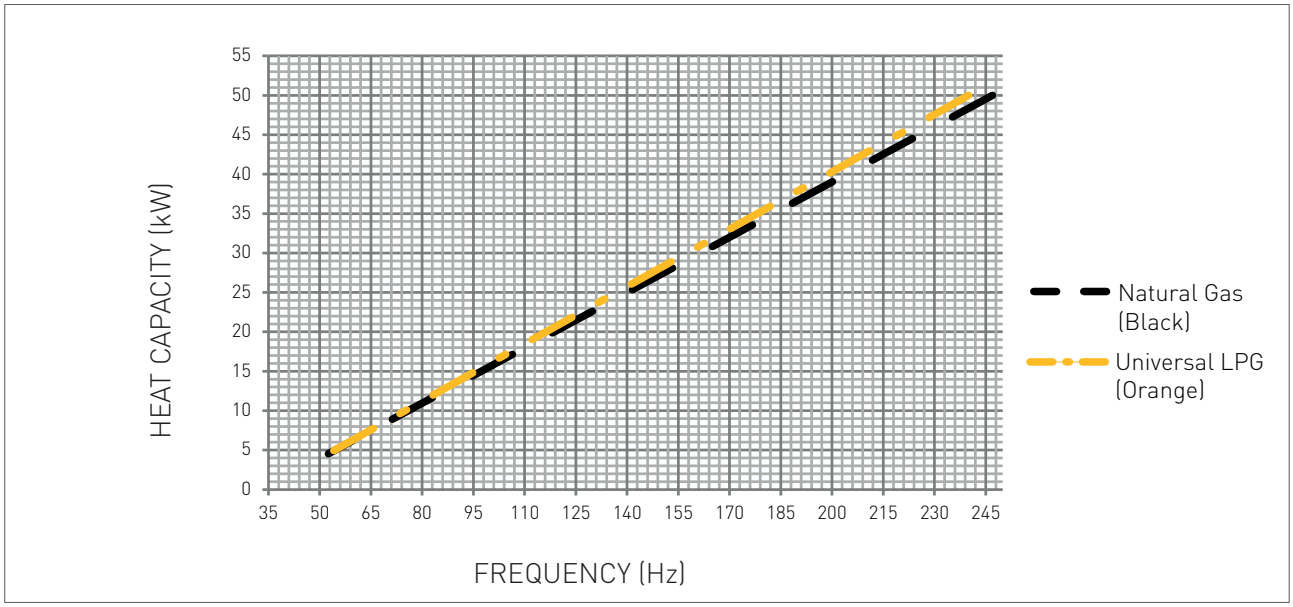

GAS TYPE		MINIMUM FREQUENCY	MAXIMUM FREQUENCY	STARTING STEP ADJUSTMENT
Natural Gas (Black)	Hz	53	247	130
Universal LPG (Orange)	Hz	53	240	140

2.2. MAINTENANCE

2.2.7. GENERAL MAINTENANCE WARNINGS

DANGER

Before each components cleaning or replacement operation, ALWAYS cut off the POWER, WATER and GAS supply of the boiler.

WARNING

To ensure greater life span and proper operation of the device, during the maintenance operations use only original spare parts.

ATTENTION

To ensure the efficiency and safety of the device, the maintenance operations must be realized on an annual basis. The operations described below, are essential to the validity of the standard Aleabrax Systems warranty and must be performed by professionally qualified personnel in accordance with current legislation and authorized by Aleabrax Systems.

Please perform the following operations once a year:

- Check that the system's water PH is between 6.5 and 8.5;
- check the pre-load pressure of the expansion vessel;
- check the sealing of the water components, and replace if necessary the gaskets;
- check that the wiring is performed in compliance with the requirements in the boiler instruction manual;
- check the wiring inside the control panel;
- remove and clean the burner from oxidation;
- check the integrity and the position of the sealed chamber sealing gasket;
- check the primary exchanger, if necessary, clean it;
- check the operation of the gas light up and safety systems. If necessary, remove and clean the flame detection and light up electrodes from incrustations paying attention to respect the distances with respect to the burner;
- check the sealing of the gas components, and replace if necessary the gaskets;
- visually check the flame and the condition of the combustion chamber;
- if necessary make sure that the combustion is suitably adjusted and if required proceed as indicated in section "CO2 VALUE CHECK AND CALIBRATION";
- periodically check the integrity of the fume exhaustion system for safety and proper operation;
- make sure that the permanent ventilation outlets are present, correctly sized and functioning, based on the installed devices. Respect the requirements provided by Local and National legislation;
- check the heating circuit safety systems: limit temperature safety thermostat; limit pressure safety;
- check the proper operation of the condensate draining system, including the devices outside the boiler such as condensate collection devices installed along the path of the fume exhaust duct or neutralization devices for acid condensate. Check that the liquid flow is not obstructed and that there are no combustion gas refluxes inside the internal system.

2.2.8. TECHNICAL DATA

Model				**FCM 50**
Compositions				1x50
Heat Input max. (C.H.)	MJ/h			198
Heat Input min. (C.H.)	MJ/h			20
Heat Output max. - 60/80°C	kW			49.19
Heat Output min. - 60/80°C	kW			4.83
Heat Output max. - 30/50°C	kW			53.40
Heat Output min. - 30/50°C	kW			5.29
Heat Output max at 30% Heat Input average - return 30°C	kW			8.98
Efficiency at 100% Heat Imput - 60/80°C	%			98.37
Heat Input average efficiency - 60/80°C	%			97.88
Efficiency Heat Output min. - 60/80°C	%			96.51
Efficiency at 100% Heat Input - 30/50°C	%			106.80
Efficiency Heat Output min. - 30/50°C	%			105.70
Efficiency at 30% Heat Input average - return 47°C	%			102.80
Efficiency at 30% Heat Input average - return 30°C	%			108.83
Combustion data				
Maximum combustion efficiency	%			97.90
Minimum combustion efficiency	%			98.0
Flue efficiency losses with burner on (Heat Input max.)	%			2.10
Flue efficiency losses with burner on (Heat Input min.)	%			2.0
Flue efficiency losses with burner off	%			0.02
Casing efficiency losses (Heat Input max.)	%			-0.47
Casing efficiency losses (Heat Input min.)	%			1.49
Casing efficiency losses with burner off	%			0.03
Fumes temperature - Heat Input max.	°C			66.4
Fumes temperature - Heat Input min.	°C			56.8
Fumes mass - Heat Input max.	g/s			22.19
Fumes mass - Heat Input min.	g/s			2.28
CO2 Heat Input max. - G20	%			9.3-9.0
CO2 Heat Input min. - G20	%			9.0-8.8
CO2 Heat Input max. - G30	%			11.3-11.1
CO2 Heat Input min. - G30	%			10.9-10.7
CO2 Heat Input max. - G31	%			10.3-10.1
CO2 Heat Input min. - G31	%			9.8-9.6
CO Heat Input max	ppm			68
CO Heat Input max.	ppm			1
Weighted CO (0% O2)	ppm			9
NOx class	class			6
Weighted NOx (0% O2)	mg/kWh			51
Central heating circuit				
Temperature setting - Central heating	°C			30-80/25-45
Max. operating temperature - Central heating	°C			80

Max. operating pressure - Central heating	kPa			300
Min. operating pressure - Central heating	kPa			30
Primary circuit water content	litres			19.20
Dimensions				
Width	mm			480
Depth	mm			582
Height	mm			1455
Gross weight	kg			105
Hydraulic Connections				
C.H. Flow	DN			100
Gas	DN			40
C.H. Return	DN			100
Condensate drain	Ø			40
Flue systems				
Fan - Max. available pressure	Pa			100
Fan - Min. available pressure	Pa			30
Max. Flue length Ø80 - Horiz. / Vertical single pipe	m			25
Electrical specifications				
Voltage-frequency	V/Hz			250/50
Max Power consumption	W			108
Max Power consumption - boiler pump (100%)	W			55
Electric power with boiler OFF	W			3.5
Protection rating	IP			X5D
Gas supply				
Nominal supply pressure - Natural Gas	kPa			1.13
Heating Max. fan speed - Natural Gas	Hz			247
Heating Min. fan speed - Natural Gas	Hz			53
Fuel consumption - Natural Gas	MJ/h			198
Nominal Supply pressure - Universal LPG	kPa			2.75
Heating Max. fan speed - Natural Gas	Hz			240
Heating Min. fan speed - Natural Gas	Hz			53
Fuel consumption - Universal LPG	MJ/h			198

SUPPORT CENTRE

2.2.9. TECHNICAL ASSEMBLY

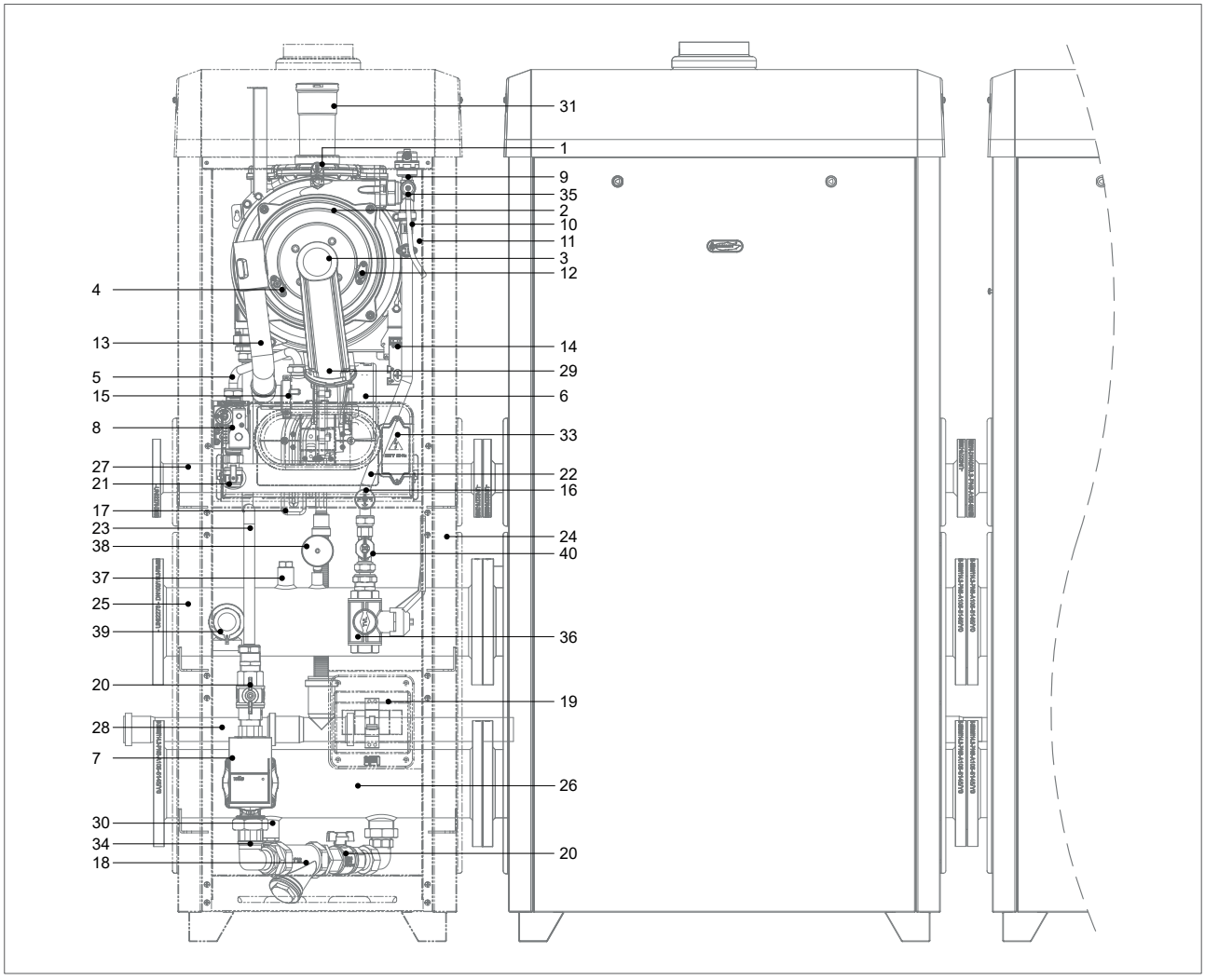

KEY

1. FUMES SAFETY THERMOFUSE
2. INTEGRATED HEAT EXCHANGER
3. BURNER UNIT
4. DETECTION ELECTRODE
5. HEATING RETURN PROBE
6. ELECTRIC FAN
7. CIRCULATOR
8. ELECTRONIC GAS VALVE
9. AUTOMATIC AIR RELIEF VALVE
10. HEATING PROBE
11. SAFETY THERMOSTAT
12. LIGHT UP ELECTRODE
13. AIR SUCTION TUBE
14. START-UP TRANSFORMER
15. PROPORTIONAL VENTURI
16. WATER PRESSURE SWITCH
17. CONDENSATE COLLECTION SIPHON
18. STRAINER
19. ELECTRICAL CONNECTIONS BOX
20. ISOLATING VALVE
21. ISOLATING GAS VALVE
22. HEATING FLOW VERTICAL CONNECTOR
23. HEATING RETURN VERTICAL CONNECTOR
24. BOX
25. HYDRAULIC MANIFOLD HEATING FLOW
26. HYDRAULIC MANIFOLD HEATING RETURN
27. HYDRAULIC MANIFOLD GAS
28. HYDRAULIC MANIFOLD CONDESANTE DRAIN
29. FLUE MANIFOLD INTEGRATED NON-RETURN VALVE
30. SYSTEM DRAIN VALVE
31. FLUE EXHAUST FITTING
32. DRAIN PIPE
33. CONTROL PANEL
34. NON-RETURN VALVE
35. MANUAL AIR RELIEF VALVE
36. ISOLATING THREE-WAY VALVE
37. INSPECTION MANHOLE
38. WATER PRESSURE GAUGE
39. SAFETY VALVE
40. FLUXMETER

2.2.10. HYDRAULIC BOARD

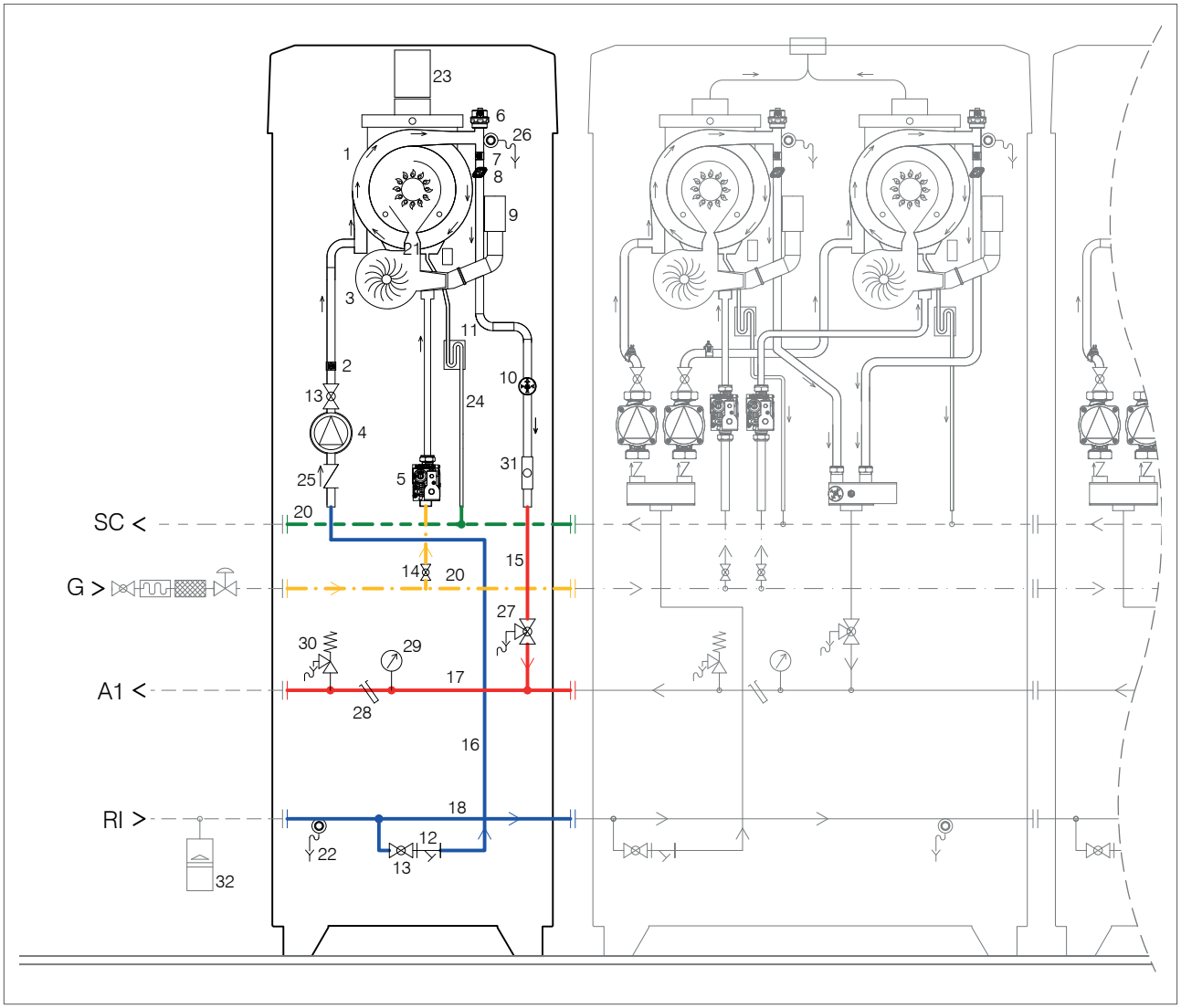

KEY

RI. C.H. RETURN
G. GAS
SC. CONDENSATE DRAIN
AI. C.H. FLOW

1. INTEGRATED HEAT EXCHANGER
2. HEATING RETURN PROBE
3. ELECTRIC FAN
4. CIRCULATOR
5. ELECTRONIC GAS VALVE
6. AUTOMATIC AIR RELIEF VALVE
7. HEATING PROBE
8. SAFETY THERMOSTAT
9. AIR SUCTION TUBE
10. WATER PRESSURE SWITCH
11. CONDENSATE COLLECTION SIPHON
12. STRAINER
13. ISOLATING VALVE
14. ISOLATING GAS VALVE
15. HEATING FLOW VERTICAL CONNECTOR
16. HEATING RETURN VERTICAL CONNECTOR
17. HYDRAULIC MANIFOLD HEATING FLOW
18. HYDRAULIC MANIFOLD HEATING RETURN
19. HYDRAULIC MANIFOLD GAS
20. HYDRAULIC MANIFOLD CONDESANTE DRAIN
21. FLUE MANIFOLD INTEGRATED NON-RETURN VALVE
22. SYSTEM DRAIN VALVE
23. FLUE EXHAUST FITTING
24. DRAIN PIPE
25. NON-RETURN VALVE
26. MANUAL AIR RELIEF VALVE
27. ISOLATING THREE-WAY VALVE
28. INSPECTION MANHOLE
29. WATER PRESSURE GAUGE
30. SAFETY VALVE
31. FLUXMETER
32. EXPANSION VESSEL (BY INSTALLER)

SUPPORT CENTRE

2.2.11. WIRING DIAGRAM

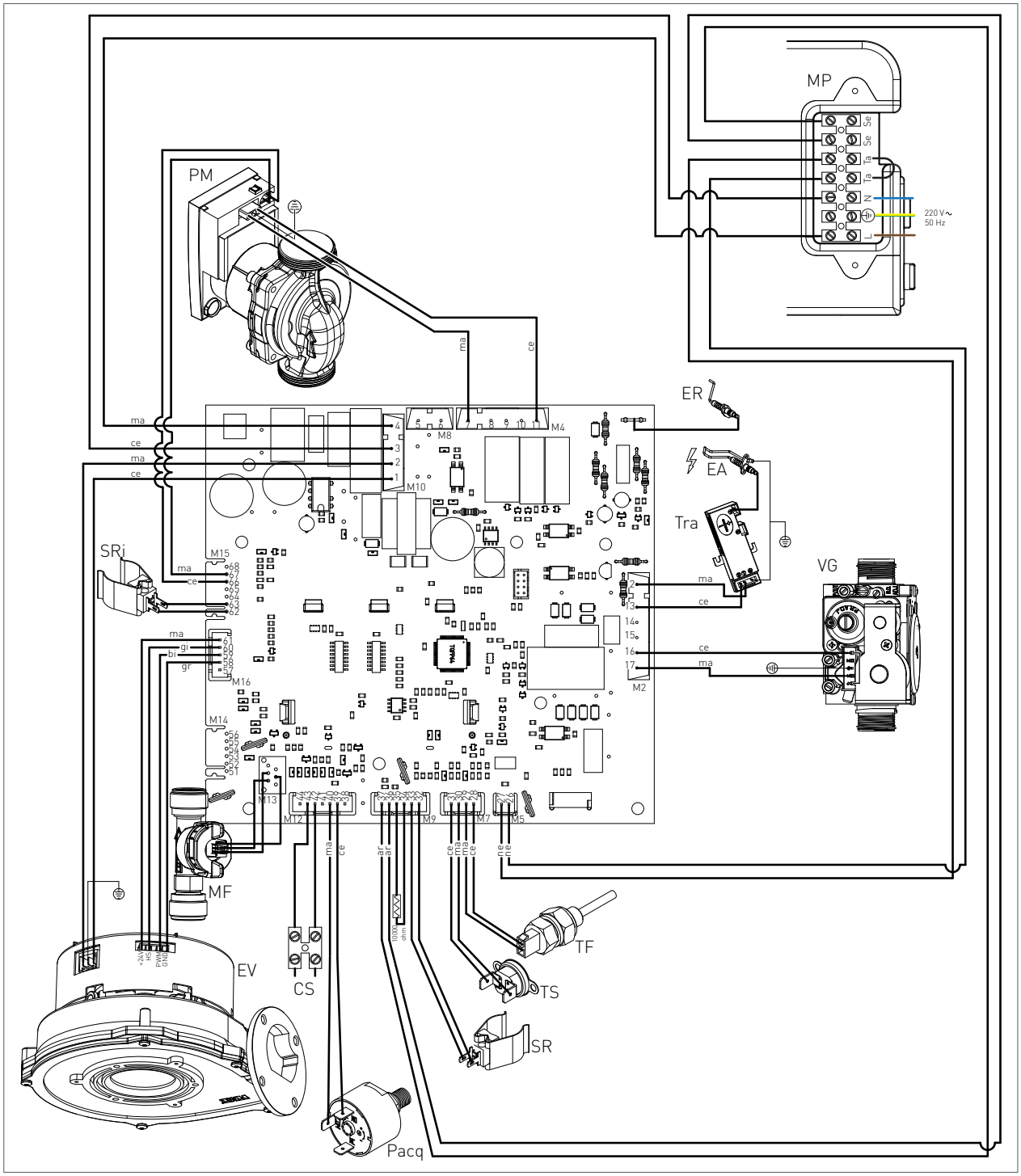

ER: DETECTION ELECTRODE
EA: START-UP ELECTRODE
PM: MODULATING PUMP
VG: GAS VALVE
TRA:START-UP TRANSFORMER
MF: FLUXMETER
CS: D.H.W. PRODUCTION CONTACT
TS: SAFETY THERMOSTAT
PACQ:WATER PRESSURE SWITCH
TF: FUMES THERMOFUSE (102°C)
SR: HEATING PROBE
EV: ELECTRIC FAN
SRI: RETURN SENSOR
MP: PANEL TERMINAL
SE: EXTERNAL PROBE
TA: ENVIRONMENT THERMOSTAT
L: LINE
N: NEUTRAL
NE: BLACK
CE: BLUE
MA: BROWN
AR: ORANGE
GI: YELLOW
BI: WHITE
GR. GREY

2.2.12. ACCESSING THE BOILER

For the majority of the control and maintenance operations you have to remove one or more panels of the casing.

The side panels can be removed only after removing the front panel.

To intervene on the front of the boiler proceed as follows:

› remove the fastening screws (1 - fig.1) placed on the lower edge of the front panel;

› grab the front panel from the bottom and remove it pulling it to yourself (A - fig. 1) and then upwards (B - fig. 1).

To intervene on the side panels of the boiler proceed as follows:

› remove the fastening screws placed on the front edge (2 - fig.1) and the lower edge (3 - fig.1) of the side panel;

› grab the bottom of the panel and remove it by moving it sideways (C - fig.2) and then pulling it upwards (D - fig.2).

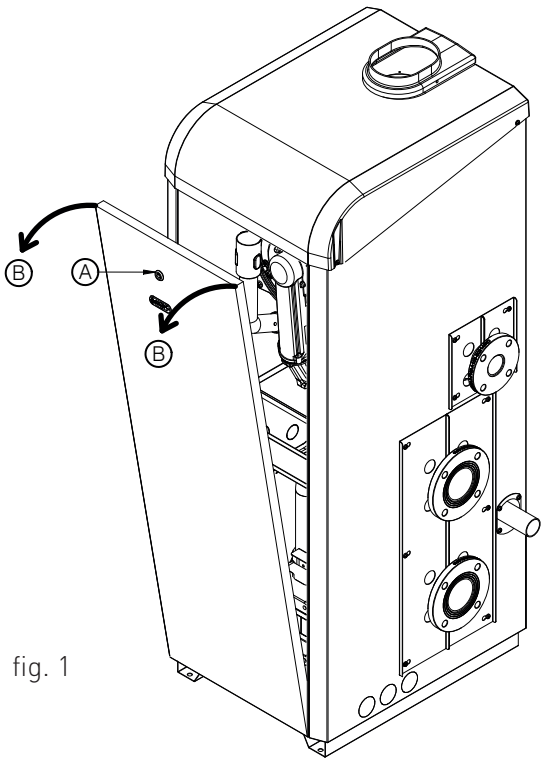

fig. 1

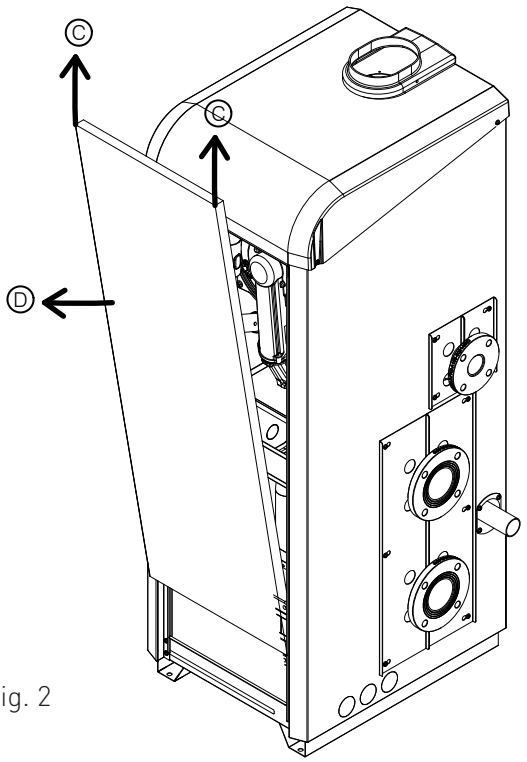

fig. 2

2.2.13. ACCESSING THE ELECTRONIC BOARD

In order ot intervene on the wirings of the control panel, please proceed as follows:

DANGER
Cut off the voltage from the main switch.

› Grab at the same time the support brackets of the control panel (fig. 1) loosening them and turn the panel downwards;

› unscrew the four fastening screws 1 - fig. 1;

› remove the crankcase pulling it upwards.

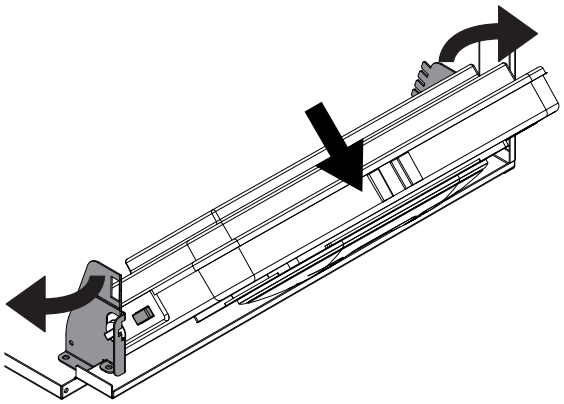

fig. 1

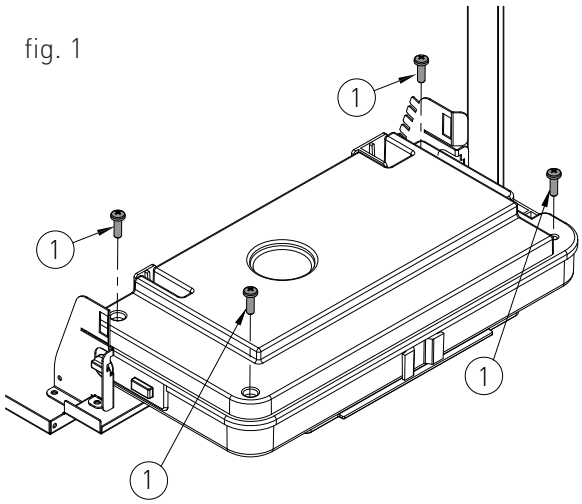

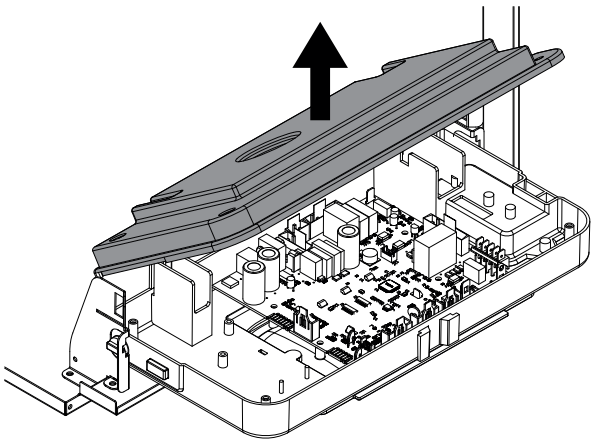

2.2.14. SYSTEM EMPTYING

HEATING SYSTEM EMPTYING

Heating circuit empting is not recommended, since water changes produce a rising of limestone inside the exchanger. When the heating circuit needs to be protected from freezing, antifreezing products have to be approved by the Company.

The boiler limestone elimination has to be performed through products which have to be approved by the Company, by following the product safety specifications, airing the room, wearing protection clothes, avoiding the mix of different products, protecting the boiler and the surrounding objects.

Whenever you need to empty the system, proceed as follows:

› switch the boiler to "WINTER" mode and activate it;

› turn off the main power supply switch;

› wait for the boiler to cool down;

› connect a flexible tube to the system emptying outlet and connect the other end of the tube to a suitable discharge;

› turn the discharge tap of the system 'RS' (see fig. 1);

› open the relief valves of the radiators starting from the one at the top and continuing downwards;

› after draining out all water, close the relief valves of the radiators and the emptying tap.

› if only the boiler needs to be drained, close the flow/return isolating valves on the heating circuit and open the drain valve located at the bottom of the boiler on the pump manifold (see fig. 1);

2.2.15. BOILER DEACTIVATION

When the applicance is no longer required for use, the necessary operation (disconnect the applicance from the main electricity / gas / water supply) must be made by qualified personnel.

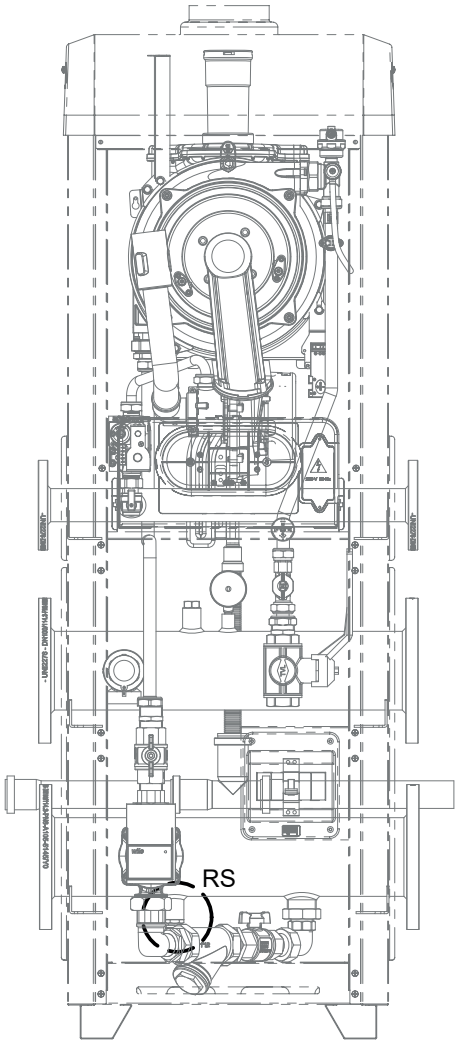

fig. 1

2.2.16. MAINTENANCE OPERATIONS

DANGER

Before carrying out any cleaning or part replacement operations, ALWAYS turn off the ELECTRICITY, WATER and GAS supplies to the boiler.

ATTENTION

Radiant Bruciatori s.p.a. will not be held responsible for damage to any of the boiler's components caused by non-compliance with this instruction.

For all maintenance operations requiring removal of the boiler casing, refer to the procedures described in chapter "ACCESSING THE BOILER".

CLEANING THE MAIN EXCHANGER MODULE AND COMBUSTION UNIT (SEE FIG. 1):

- Disconnect the electrical connections of the electric fan.
- Disconnect the joint and remove the pipe linking the gas valve to the injector unit (venturi, fig.1 - A).
- Disconnect the joint and remove the gas feed pipe from the gas valve.
- Un-plug the ignition electrode and flame detection wires from the ignition control unit.
- Unscrew the nuts (fig.1 - C) securing the burner unit (consisting of a fan, manifold and burner) to the primary heat exchanger.
- Remove the burner unit (fig.1 - B), paying particular attention not to remove the ceramic fibre protection from the bottom of the heat exchanger.
- Check that the burner (fig.1 - E) is not affected by deposits, scaling or excessive oxidation. Check that all the holes in the burner are free.
- Clean the electrodes (fig.1 - D) carefully without altering their positions with respect to the burner.

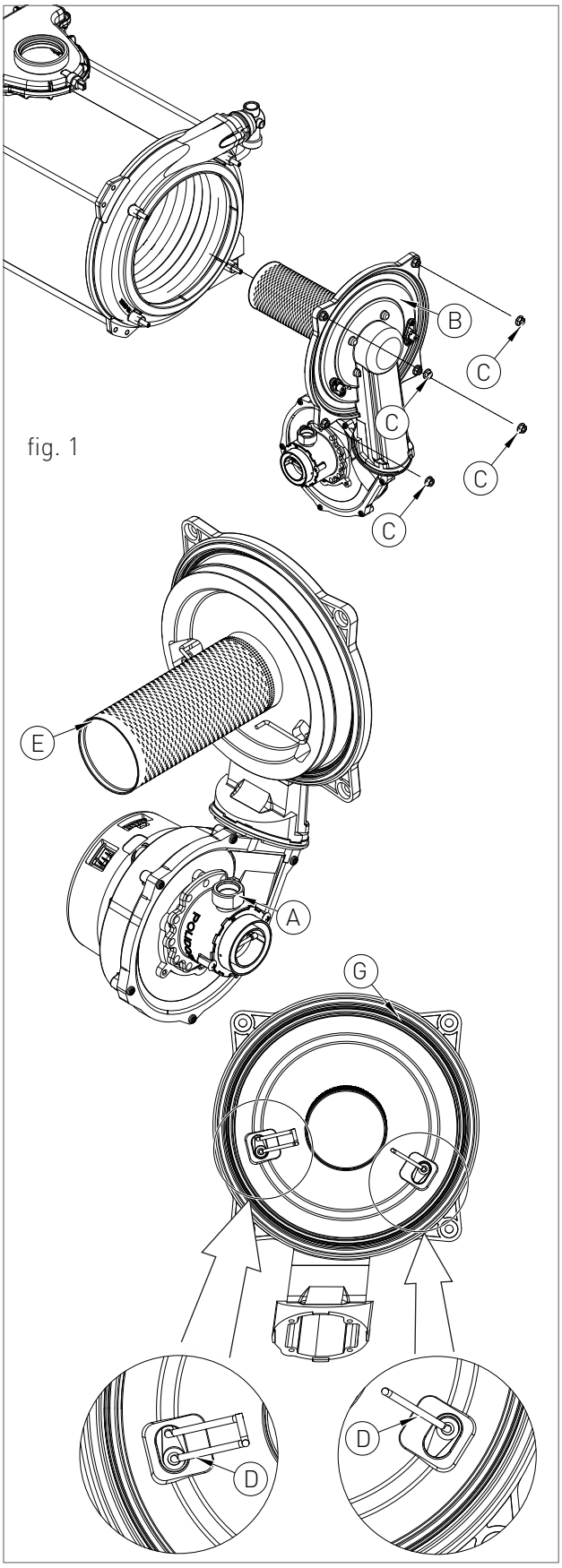

fig. 1

- Clean the burner cylinder (fig.1 - E) using a non-metal brush and without damaging the ceramic fibre.
- Check the integrity of the washer (fig.1 - G) on the cover of the burner.
- Clean the heat exchanger (fig.2 - F) using a household detergent for stainless steel, distributing the product on the spirals of the exchanger using a brush. Do not wet the ceramic fibre coating (fig.2 - H). Wait a few minutes then remove the deposits using a non-metal brush. Then remove the residues under running water.
- Please twist-off the holding screw of the condensate trap (fig. 2 - T); remove the trap and wash under running water.
- With the cleaning completed, re-assemble the components following the above procedure in reverse order.
- Finally, check the boiler to make sure that all gas and exhaust joints are tight.

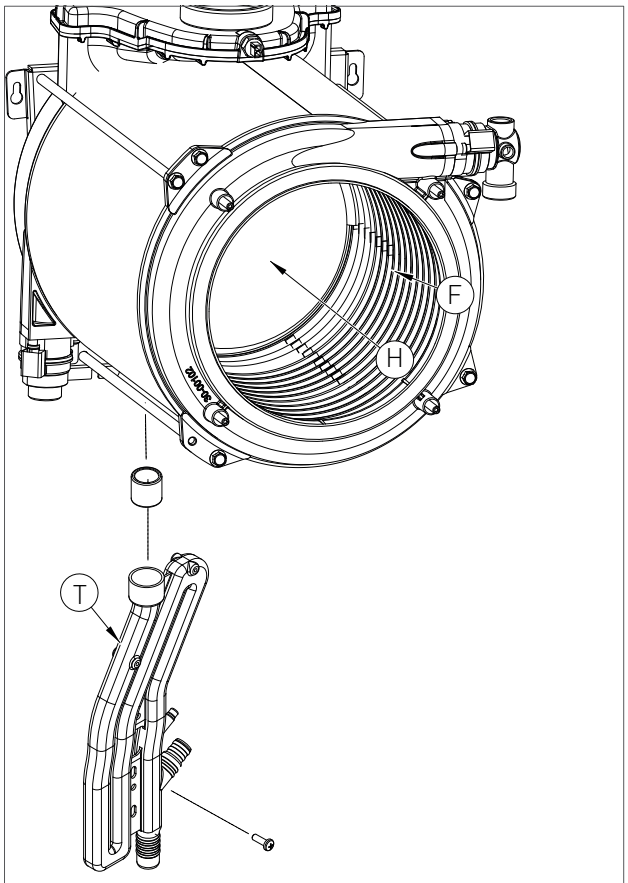

fig. 2

PART REPLACEMENT:

IGNITION AND/OR FLAME DETECTION ELECTRODES (FIG. 3)

- Un-Plug the electrode wires.
- Slacken the fixing screws.
- Remove the electrodes. When fitting the new ones, check that the seals are not damaged. Replace if necessary.
- Reconnect the wires and re-assemble the components following the above procedure in reverse order.
- Switch on the power supply and restart the appliance.

ATTENTION

If the boiler does not restart, check the positions of the electrodes (especially the ignition electrode). Make sure that original position and distances between the electrodes and the burner are respected to avoid a boiler malfunction).

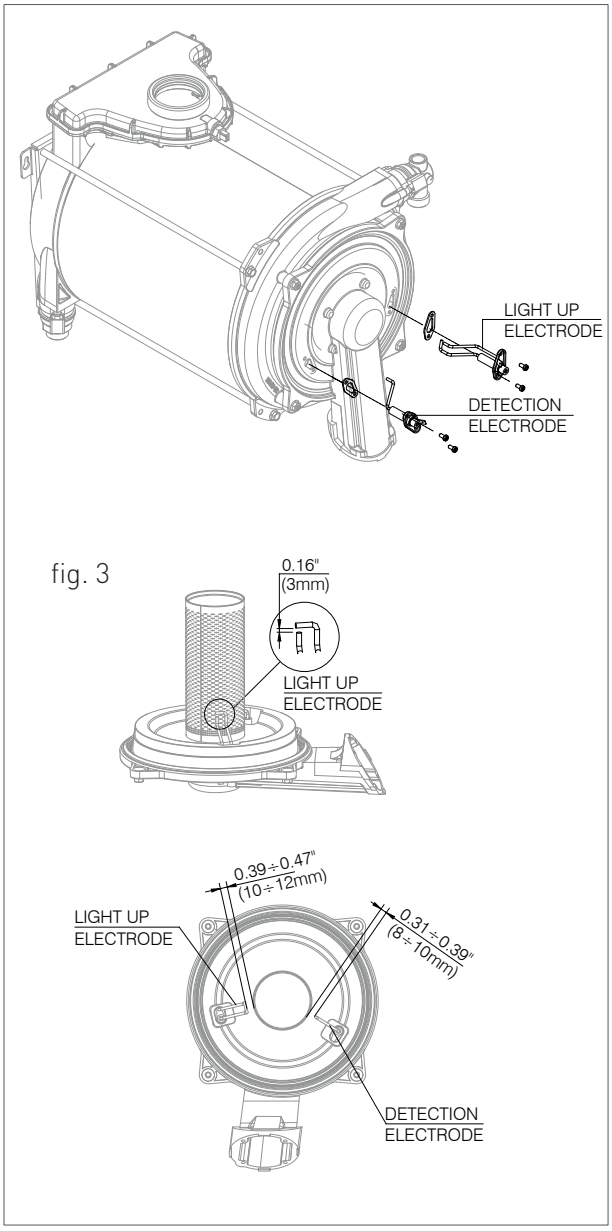

fig. 3

MISCELLANEOUS ITEMS (FIG. 4 - A)

- Disconnect the electrical connection.
- Unscrew the fixing screws (fig.4 - C).
- Replace the thermostat and re-assemble the components following the above procedure in reverse order.
- Switch on the electricity and restart the appliance.

MISCELLANEOUS ITEMS (FIG. 4 - B)

- Close the shut-off valves and drain the central heating circuit of the boiler.
- Un-screw the components (fig. 4 - B).
- Replace the thermostat and re-assemble the components following the above procedure in reverse order.
- Switch on the water and fill the system with water. Check for any leaks from the joints and bleed off any air from the heating circuit.

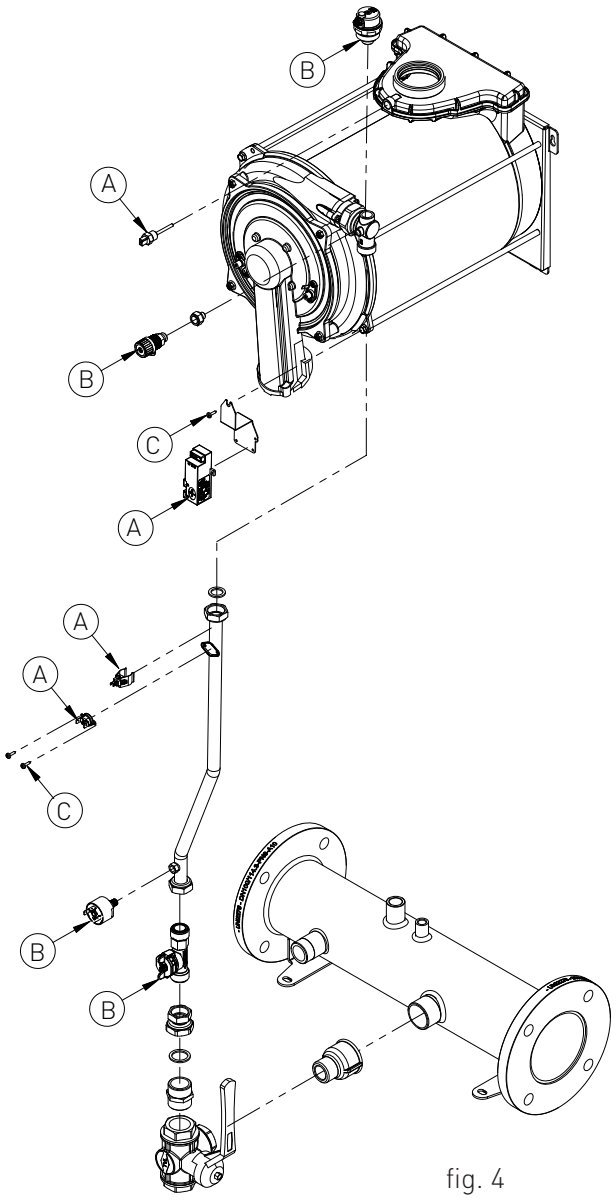

fig. 4

GAS VALVE (FIG. 5)

- Close the gas tap.
- Disconnect the joints and remove the gas pipe connecting the gas valve to the venturi.
- Unscrew the gas tap cap and remove the gas valve.
- Replace the gas valve and re-assemble the various components and proceed in reverse order. Please have a special attention to:
- Replace all the gas gaskets;
- Seal fully all the gas connections;
- Restore the electric and gas supplies, and please make sure there are no leakages thru soapy solutions or detective sprays.

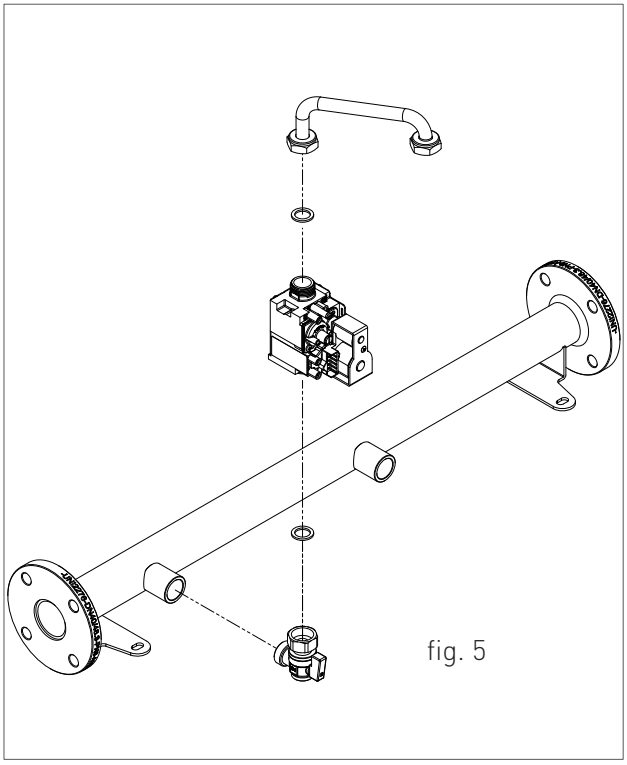

fig. 5

ELECTRIC FAN (FIG. 6)

- Remove and dismantle the entire burner unit (see paragraph "Cleaning the main exchanger module and combustion unit (fig. 1)").
- Use an 8 mm spanner to unscrew the four nuts securing the electric fan to the gas manifold and then remove the electric fan, noting the positions of the washer and diaphragm.
- Remove the air intake duct, unscrew the fixing screws from the venturi and remove the electric fan.
- Replace the electric fan and re-assemble the components following the above procedure in reverse order.
- Switch on the electricity and check the soundness of the joint by measuring the CO2 levels.

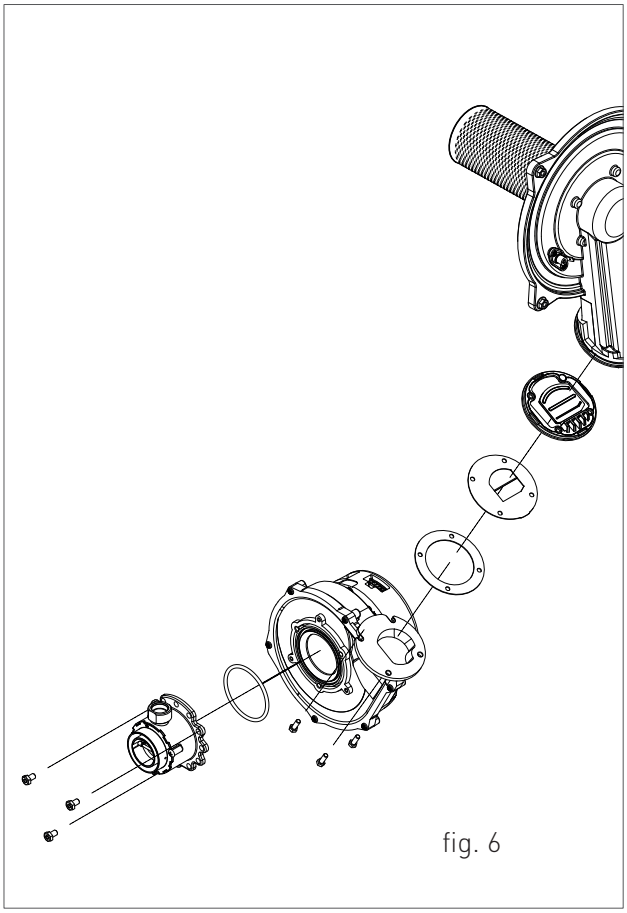

fig. 6

CIRCULATING PUMP (FIG. 7)

- Close the shut-off valves and drain the central heating circuit of the boiler.
- Switch off the power to the boiler.
- Un-screw the holding union rings.
- Replace the circulation pump and re-assemble the components following the above procedure in reverse order.
- Switch on the electricity, water, and fill the system with water. Check for any leaks from the joints and bleed off any air from the heating circuit.

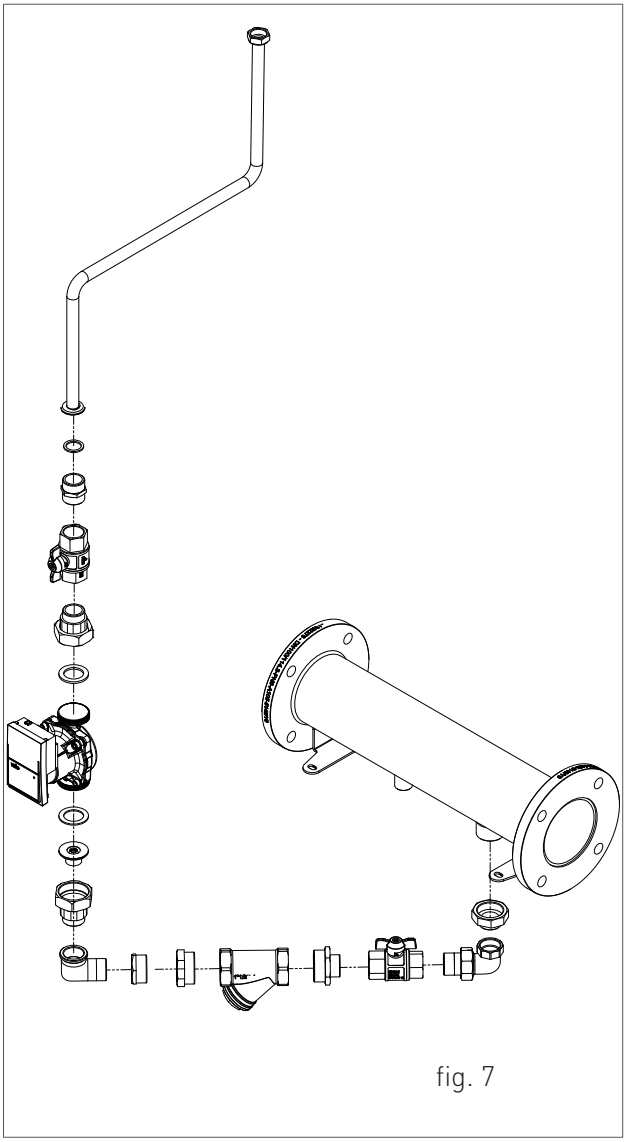

fig. 7

PRIMARY HEAT EXCHANGER (FIG. 8)

- Close the shut-off valves and drain the central heating circuit of the boiler.
- Switch off the power and gas supply to the boiler.
- Remove and dismantle the entire burner unit (see paragraph "Cleaning the main exchanger module and combustion unit (fig. 1)").
- Un-screw the holding screw of the condensate trap, then slip the pipe.
- Remove the fixing springs and then the delivery and return pipes.
- Twist-off the holding screws of the back exchanger, then remove the exchanger.
- Replace the heat exchanger and re-assemble the components following the above procedure in reverse order.
- Switch on the electricity, water and gas supplies and fill the system with water. Check for any leaks from the joints and bleed off any air from the circuit. Restart the boiler, making sure that there are no gas leaks.

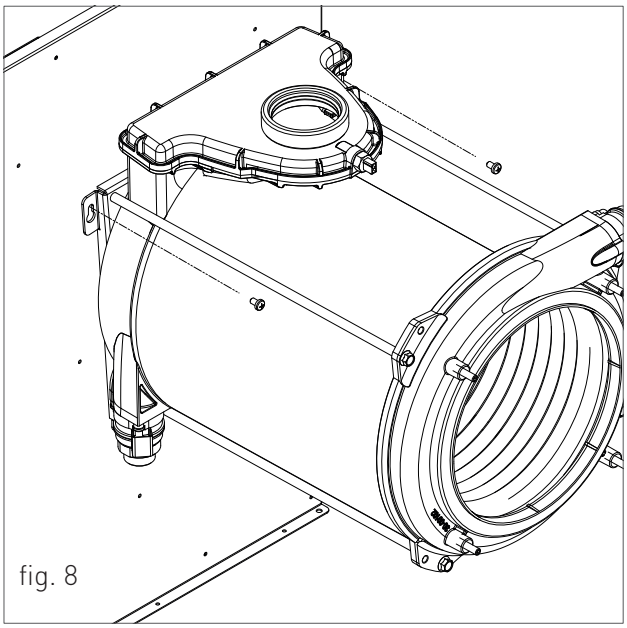

fig. 8

2.2.17. FAULT SIGNALLING CODES

To view the last 5 fault signalling codes chronologically, starting with the most recent one, activate the 'OFF' mode by pressing the FUNCTION '⏻' key and hold the key INFO 'ⓘ' for 5 seconds. Use keys '⊕' and '⊖' of the heating circuit to scroll through the list of saved faults. To reset the fault history press the RESET 'Ⓡ' key. To exit display mode press the INFO 'ⓘ' key.

CODE	FAULT	POSSIBLE CAUSE	SOLUTION	RESET
E01	***FLAME BLOCK***	**NO FLAME LIGHT UP**		MANUAL RESET (PRESS THE RESET 'Ⓡ' KEY).
		GAS MISSING;	CHECK THE ADDUCTION NETWORK;	
		MASS OR BROKEN START-UP ELECTRODE;	REPLACE IT;	
		GAS VALVE BROKEN;	REPLACE IT;	
		SLOW LIGHT UP TOO LOW ADJUSTMENT;	ADJUST MINIMUM OR SLOW LIGHT UP;	
		VALVE INFEED PRESSURE TOO HIGH (ONLY FOR GPL BOILERS).	CHECK THE MAXIMUM ADJUSTMENT PRESSURE	
		WITH FLAME LIGHT UP		
		NEUTRAL AND PHASE INVERTED POWER SUPPLY;	PROPERLY CONNECT THE POWER SUPPLY;	
		DETECTION ELECTRODE BROKEN;	REPLACE IT;	
		DETECTION ELECTRODE CABLE DISCONNECTED.	CHECK THE WIRING.	
		ELECTRICAL CURRENT PHASE-PHASE	IF THE TENSION MEASURES BETWEEN NEUTRAL AND GROUND IS ALMOST EQUAL TO THE ONE MEASURED BETWEEN PHASE AND GROUND, YOU HAVE TO INSTALL A PHASE-PHASE TRANSFORMER KIT (COD. 88021LA)	

CODE	FAULT	POSSIBLE CAUSE	SOLUTION	RESET
E02	***SAFETY THERMOSTAT (95°C)***	THERMOSTAT CABLE DISCONNECTED;	CHECK THE WIRING:	AUTOMATIC.
		BROKEN THERMOSTAT.	REPLACE IT.	
E03	***FUMES SAFETY THERMOFUSE (102°C)***	THERMOFUSE BROKEN;	REPLACE IT;	MANUAL RESET (PRESS THE RESET '®' KEY).
		THERMOFUSE CABLE DISCONNECTED.	CHECK THE WIRING.	
E04	***WATER MISSING IN THE SYSTEM***	INSUFFICIENT WATER PRESSURE INSIDE THE SYSTEM (LOWER THAN 0.3 BAR);	LOAD THE SYSTEM;	AUTOMATIC.
		WATER PRESSURE SWITCH CABLE DISCONNECTED;	CHECK THE WIRING;	
		WATER PRESSURE SWITCH BROKEN.	REPLACE IT.	
E05	***HEATING PROBE***	BROKEN OR INCORRECTLY CALIBRATED PROBE (RESISTANCE VALUE 10 KOHM AT 25 °C NTC);	REPLACE IT;	AUTOMATIC.
		DISCONNECTED OR WET PROBE CONNECTOR.	CHECK THE WIRING.	
E10	***LOW FLOW RATE***	THE FLOW RATE VALUE DETECTED BY THE FLOWMETER IS LOWER THAN THE VALUE SET AT PARAMETER P33.	INCREASE THE FLOW RATE OR LOWER THE VALUE AT PARAMETER P33.	AUTOMATIC.
E14	***AIR PRESSURE SWITCH***	AIR PRESSURE SWITCH CABLE DISCONNECTED;	CHECK THE WIRING;	MANUAL RESET (PRESS THE RESET '®' KEY).
		DISCHARGE OR SUCTION CLOSED;	CHECK THE FUMES DISCHARGE DUCT;	
		AIR PRESSURE SWITCH DEFECTIVE.	REPLACE IT.	

CODE	FAULT	POSSIBLE CAUSE	SOLUTION	RESET
E15	***RETURN PROBE***	BROKEN OR INCORRECTLY CALIBRATED PROBE (RESISTANCE VALUE 10 KOHM AT 25 °C NTC);	REPLACE IT;	AUTOMATIC.
		DISCONNECTED OR WET PROBE CONNECTOR.	CHECK THE WIRING.	
E16	***ELECTRIC FAN***	ELECTRIC FAN BOARD BROKEN;	REPLACE IT;	AUTOMATIC.
		ELECTRIC FAN BROKEN;	REPLACE IT;	
		FAULTY POWER SUPPLY CABLE.	REPLACE IT.	
E18	***INSUFFICIENT CIRCULATION***	EXCHANGER OBSTRUCTED;	CLEAN OR REPLACE THE EXCHANGER;	AUTOMATIC.
		CIRCULATOR BROKEN OR DIRTY IMPELLER.	CLEAN THE IMPELLER OR REPLACE THE CIRCULATOR.	
E21	***GENERAL INTERNAL BOARD ERROR***	INCORRECT SIGNAL RECOGNITION BY THE MODULATION BOARD MICRO-PROCESSOR.	IF THE MODULATION BOARD DOES NOT RESET THE ERROR AUTOMATICALLY, REPLACE IT.	AUTOMATIC.
E22	***PARAMETERS PROGRAMMING REQUEST***	MICRO=PROCESSOR MEMORY LOSS.	PARAMETERS REPROGRAMMING.	MANUAL RESET (CUT OFF THE TENSION).
E31	***INCOMPATIBLE REMOTE CONTROL***	FUNCTION ACTIVE WHEN THE CONNECTED REMOTE CONTROL IS NOT COMPATIBLE WITH THE P.C.B.	REPLACE IT WITH A COMPATIBLE ONE.	AUTOMATIC.
E32	***COMMUNICATION ERROR BETWEEN THE BOILER BOARD AND THE MODBUS BOARD***	NO ELECTRICAL CONNECTION;	CHECK THE WIRING;	AUTOMATIC.
		MODBUS BOARD BROKEN;	REPLACE IT;	

CODE	FAULT	POSSIBLE CAUSE	SOLUTION	RESET
E35	***RESIDUAL FLAME***	FAULTY DETECTION ELECTRODE;	CLEAN IT OR REPLACE IT;	MANUAL RESET (PRESS THE RESET '®' KEY).
		FAULTY DETECTION ELECTRODE CABLE;	REPLACE IT;	
		FAULTY MODULATION BOARD.	REPLACE IT.	
E40	***SUPPLY VOLTAGE***	SUPPLY VOLTAGE OFF THE OPERATION RANGE (≤160 VOLTS).	CHECK THE POWER SUPPLY NETWORK (THE ERROR DEACTIVATES AUTOMATICALLY AS SOON AS THE SUPPLY VOLTAGE FALLS BACK WITHIN THE REQUESTED LIMITS).	AUTOMATIC.
E52	***COMMUNICATION FAULT BETWEEN MODBUS CONTROLLER AND MODBUS CONTROL UNIT***	NO ELECTRICAL CONNECTION;	CHECK THE WIRING;	AUTOMATIC.
		MODBUS CONTROL UNIT BROKEN.	REPLACE IT;	

2.2.18. ACTIVE FUNCTIONS SIGNALLING CODES

CODE	FUNCTION	DESCRIPTION
F07	***CHIMNEY SWEEP ACTIVE***	YOU CAN ACTIVATE IT BY HOLDING FOR 7 SECONDS THE RESET '®' KEY AND YOU CAN DEACTIVATE IT BY TURNING OFF THE BOILER. THIS FUNCTION BRINGS THE BOILER TO ITS MINIMUM AND MAXIMUM HEATING POWER FOR 15 MINUTES DEACTIVATING THE MODULATION FUNCTION. GENERALLY USED FOR PERFORMING THE COMBUSTION AND CALIBRATION TESTS.
F08	***HEATING CIRCUIT ANTI-FREEZE***	IT ACTIVATES AUTOMATICALLY WHEN THE HEATING PROBE DETECTS A TEMPERATURE OF 12°C. THE BOILER OPERATES AT MINIMUM GAS PRESSURE WITH THE DIVERTER VALVE SET TO 'WINTER' MODE. IT DEACTIVATES WHEN THE HEATING FLOW WATER TEMPERATURE REACHES THE 30°C AND, IN PRESENCE OF A RETURN SENSOR, WHEN THE HEATING RETURN WATER TEMPERATURE REACHES THE 20°C.
F33	***SYSTEM AIR RELEASE CYCLE***	IT ACTIVATES AUTOMATICALLY AT FIRST BOILER START-UP, PERFORMING FOR 5 MINUTES A SERIES OF CYCLES DURING WHICH THE PUMP IS ACTIVATED FOR 40 SECONDS AND DEACTIVATED FOR 20 SECONDS. REGULAR OPERATION IS ALLOWED ONLY AFTER THIS FUNCTION IS COMPLETED. IT CAN ALSO ACTIVATE DURING NORMAL BOILER OPERATION, IF THE WATER PRESSURE SWITCH CONFIRMATION IS MISSING, WHEN THE CONTACT IS RE-CLOSED, A 2 MINUTES RELEASE CYCLE WILL BE PERFORMED.

2.2.19. GAS CONVERSION

ATTENTION

Make sure that the gas adduction tube is suitable for the new type of fuel with which the boiler is supplied.

› loosen the two screws '1' (fig.1) from the fastening bush, and remove the air suction tube;

› unscrew the tube coupling that connects the gas valve to venturi;

› unscrew the three fastening screws '2' (fig.1) of the venturi 'V' (fig.1) using a 10 key, as shown in figure 2;

› remove the two screws '3' (fig.3) and apply pressure on the rear side of venturi 'C' (fig.3);

› replace the body venturi with the one suitable for the type of supply gas (cod. 30-00225 for Natural gas / cod. 30-00226 for Universal LPG) and make sure the tooth 'D' (fig.3) is adjusted downwards on the aluminium ring nut (see fig.3);

› remount the components following the demounting operations in reverse making sure that gasket 'G' is re-assembled as shown in fig.1;

› set the boiler to operate with the new type of gas, changing the value of the parameter P02 'GAS TYPE SELECTION' from the control panel (see chapters 'DIGITECH CS PARAMETERS TABLE' and 'ACCESSING AND PROGRAMMING THE PARAMETERS');

› adjust the CO2 combustion value as indicated in chapter 'CO2 VALUE CHECK AND CALIBRATION'.

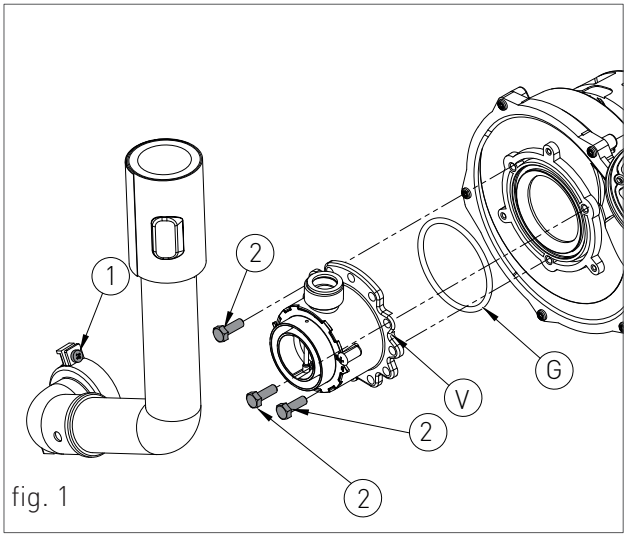

fig. 1

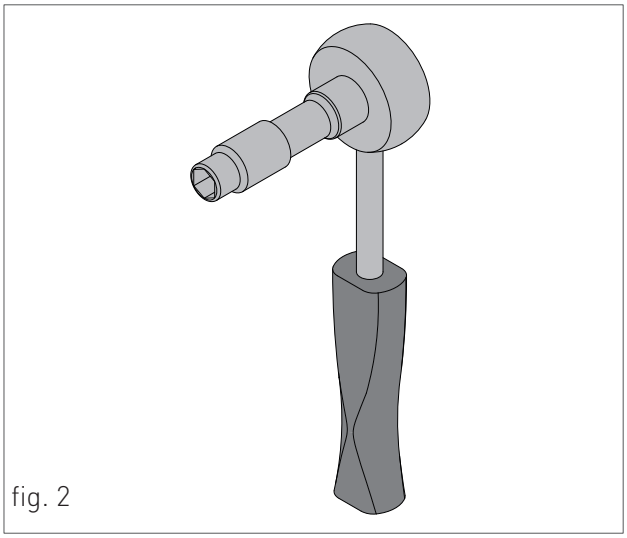
fig. 2

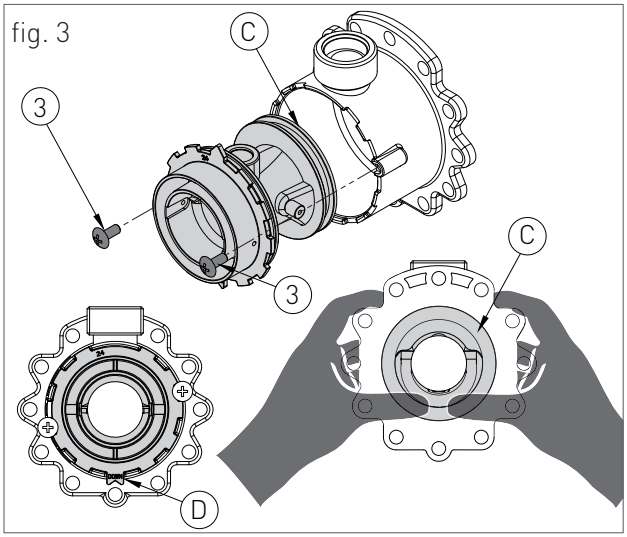

fig. 3

Aleabrax Systems

5-7 Katanning St

Bayswater WA 6105

AUSTRALIA