ALEABRAX SYSTEMS

Installation and Maintenance Manual for model

A1K 100

Premix condensing system boiler only heating

DO NOT SPRAY AEROSOLS IN THE VICINITY OF THIS APPLIANCE WHILE IT IS IN OPERATION.

DO NOT USE OR STORE FLAMMABLE MATERIALS IN OR NEAR THIS APPLIANCE.

DO NOT PLACE ARTICLES ON OR AGAINST THIS APPLIANCE.

DO NOT MODIFY THIS APPLIANCE.

A1K 100 - RAD - ING - Man. Inst. - 2006.1_no_INAIL_SK.2_firm.L226C

TABLE OF CONTENTS

INTRODUCTION 4

1. INSTALLER SECTION 7

1.1. INSTALLATION 8
1.1.1. GENERAL INSTALLATION WARNINGS 8
1.1.2. BOILER LOCATION ENVIRONMENTAL REQUIREMENTS 8
1.1.3. REFERENCE LEGISLATION 9
1.1.4. UNPACKING 10
1.1.5. BOILER OVERALL DIMENSIONS 11
1.1.6. JIG 11
1.1.7. OVERALL DIMENSIONS OF THE HEATING ONLY MODULE 11
1.1.8. OVERALL DIMENSIONS OF THE MODULE FOR REMOTE BOILER SUPPLY 12
1.1.9. MECHANICAL SYSTEM DIAGRAM 13
1.1.10. SYSTEM ACCESSORIES 16
1.1.11. CIRCULATOR PREVALENCE/FLOW DIAGRAM 18
1.1.12. GENERATOR INSTALLATION 19
1.1.13. HYDRAULIC CONNECTION 22
1.1.14. CHARACTERISTICS OF THE WATER OF THE SYSTEM 23
1.1.15. SYSTEM FILLING 25
1.1.16. CONDENSATE DRAIN 26
1.1.17. ANTI-FREEZE PROTECTION 28
1.1.18. GAS CONNECTION 29
1.1.19. ELECTRICAL CONNECTION 29
1.1.20. POWER SUPPLY 30
1.1.21. OPTIONAL ELECTRICAL CONNECTIONS 31
1.1.22. FUME EXHAUST FITTINGS 35
1.1.23. TYPES OF FUME EXHAUST SYSTEMS 36

2. SUPPORT CENTRE SECTION 41

2.1. FIRST START-UP 42
2.1.1. PRELIMINARY OPERATIONS FOR FIRST START-UP 42
2.1.2. BOILER COMMISSIONING 43
2.1.3. CO2 VALUE CHECK AND CALIBRATION 44
2.1.4. ACCESSING AND PROGRAMMING THE PARAMETERS 45
2.1.5. DIGITECH CS PARAMETERS TABLE (MIAH412) 48
2.1.6. ELECTRIC FAN FREQUENCY/HEAT CAPACITY DIAGRAM* 57

2.2. MAINTENANCE 58
2.2.7. GENERAL MAINTENANCE WARNINGS 58
2.2.8. TECHNICAL DATA 59

2.2.8. TECHNICAL ASSEMBLY 61
2.2.9. HYDRAULIC BOARD 62
2.2.10. SLAVE BOARD ELECTRICAL CONNECTIONS 64
2.2.11. MASTER BOARD ELECTRICAL CONNECTIONS 65
2.2.13. ACCESSING THE BOILER 66
2.2.12. ACCESSING THE MASTER ELECTRONIC BOARD 67
2.2.13. ACCESSING THE SLAVE ELECTRONIC BOARD 68
2.2.14. SYSTEM EMPTYING 69
2.2.13. MAINTENANCE OPERATIONS 70
2.2.15. FAULT SIGNALLING CODES 77
2.2.16. ACTIVE FUNCTIONS SIGNALLING CODES 82
2.2.17. GAS CONVERSION 83

INTRODUCTION

WARNING

Before starting any operation it is mandatory to read this instruction manual, in relation to the activities to be carried out as described in each relevant section. Proper operation and optimal performance of the boiler are ensured by strict compliance with all the instructions given in this manual.

The installation, use and maintenance manual is an integral and essential part of the product and must be delivered to the user.

MANUAL USERS

The manual users are all those who install, use and maintain the boiler.

The boiler must be used and accessed only by qualified operators that fully read and understood the use and maintenance manual, paying particular attention to the warnings.

READING AND SYMBOLS OF THE MANUAL

To ease the understanding of this manual, recurrent symbols where used, in particular:

› On the outer margin of the page is placed a thumb index indicating the type of user to which the instructions in that section address.

› The titles are differentiated by thickness and size in accordance with their hierarchy.

› The images contain important parts described in the text, marked with numbers or letters.

› (See chap "chapter name"): this entry indicates another section in the Manual that you should refer to.

› Device: this term is used referring to the boiler.

DANGER

It identifies an information related to a general danger that if not complied with, may cause serious personal damage or even death.

ATTENTION

It identifies an information that if not complied with may cause small or medium level lesions to the person or serious deterioration to the boiler.

WARNING

It identifies a precaution information that must be observed in order to avoid damaging the machine or parts of it.

MANUAL STORAGE

The manual must be carefully stored and replaced in case of deterioration and/or low legibility.

If you misplace the use and maintenance manual, you can request it from the Technical Support Centre giving the serial number and model of the boiler indicated on the plate placed on the right side of its casing.

WARNING

DO NOT SPRAY AEROSOLS IN THE VICINITY OF THIS APPLIANCE WHILE IT IS IN OPERATION.

DO NOT USE OR STORE FLAMMABLE MATERIALS IN OR NEAR THIS APPLIANCE.

DO NOT PLACE ARTICLES ON OR AGAINST THIS APPLIANCE.

DO NOT MODIFY THIS APPLIANCE.

MANUFACTURER WARRANTY AND RESPONSIBILITY

The warranty of the Manufacturer is provided only through its own authorized Technical Support Centres and covers all conformity defects at the moment of sale.

The technical and functional features of the device are ensured by its use in compliance:

1. with the use and maintenance instructions contained in the manuals accompanying the product, the content of which the customer certifies that he is aware;

2. with the conditions and purposes to which assets of the same type are intended.

For more information on the warranty validity, its duration, the obligations and the exemptions, please consult the First start-up certificate attached to this manual.

The manufacturer reserves:

› the right to modify the tools and relative technical documentation without any obligation to third parties; neither will the company be held responsible for any inaccuracies in this handbook deriving from printing or translation errors;

› the material and intellectual ownership of this manual and forbids its distribution and duplication, even partial, without prior written authorization.

1. INSTALLER SECTION

The installation operations described in this section should be performed only by qualified personnel, having the appropriate technical training in the field for the installation and maintenance of components of civil and industrial domestic hot water production and heating plants.

1.1. INSTALLATION

1.1.1. GENERAL INSTALLATION WARNINGS

ATTENTION

This machine may be used only for the purpose for which it has been designed: heat water to a temperature below boiling point at atmospheric pressure. Any other use is considered wrong and dangerous. The manufacturer is excluded from any contractual or out of contract responsibility for damage caused to people, animals or property due to errors during installation.

ATTENTION

This boiler should be installed only by qualified personnel, having the appropriate technical training in the field for the installation and maintenance of components of civil and industrial domestic hot water production and heating plants.

ATTENTION

After having removed the packing, make sure the equipment is intact. In case of doubt, do not use the equipment and contact the supplier.

ATTENTION

This Appliance must be used exclusively in a pressurized central heating system and is not suitable for pool heating.

BEFORE INSTALLING THE BOILER, THE INSTALLER MUST MAKE SURE THAT THE FOLLOWING CONDITIONS ARE MET:

› The device is connected to a heating plant and a water supply network appropriate for its power and performance.

› The location must be properly vented through an air vent.

› The air vent must be placed at floor level to prevent it from being obstructed, protected by a grid that does not hamper the useful section of passage.

› The device is suitable for use with the type of gas available by checking the boiler data plate (placed on the inner side of the front casing.

› Make sure that the tubes and couplings are perfectly sealed, without any gas leaks.

› Make sure that the grounding system works properly.

› Make sure that the electrical systems is suitable for the maximum power absorbed by the equipment, value indicated on the data plate.

WARNING

Use only original Aleabrax Systems optional or kit accessories (including electrical).

1.1.2. BOILER LOCATION ENVIRONMENTAL REQUIREMENTS

The boiler has a thermal power over 35 kW and, therefore, it must be installed only into a heating unit.

The device's installation location should be vented due to the presence of threaded joints on the gas adduction line. The location should be therefore provided with vents as to ensure air exchange, with output grid in the natural accumulation area of eventual gas losses.

WARNING

DO NOT install the boiler in a technical compartment near a swimming pool or a laundry, to avoid that the combustion air is exposed to chlorine, ammonia or alkaline agents that may worsen the corrosion phenomenon of the heat exchanger. Failure

to observe this caution will void the warranty of the heat exchanger.

WARNING

If the temperature in the boiler installation location goes below -10 centigrades, please fill the plant with anti-freeze liquid and insert and electrical resistances kit (see chapter 'ANTI-FREEZE PROTECTION').

WARNING

The manufacturer will not be held responsible for damages caused by incorrect installation not in conformity with the over mentioned instructions and not protected adequately from the freeze.

1.1.3. REFERENCE LEGISLATION

The installation must be realized according to the requirements of current legislation and in compliance with local technical regulations, according to the indications of the good technique.

This appliance must be installed by an authorised person in accordance with this instruction manual, AS/NZS 5601 – Gas installations (installation and pipe sizing), local gas fitting regulations, local electrical regulations, local water regulations, local health regulations, Building Code of Australia and any other government authority.

1.1.4. UNPACKING

WARNING

Please unpack the boiler just before installing it. The Company is not responsible for the damages caused to the device due to incorrect storage.

WARNING

The packing elements (cardboard box, wooden crate, nails, fasteners, plastic bags, expanded polystyrene, etc.) must be kept out of the reach of children as they may be dangerous. Therefore they should be dismantled suitably differentiating them in accordance with the standards in force.

To unpack the boiler, proceed as follows:

› Place the packed boiler on the floor (fig. 1-A) and remove the fasteners opening the four flaps of the box outwards.

› Turn the boiler at 90° holding it with your hand (fig. 1-B).

› Lift the box (fig. 1-C) and remove the guards (fig. 1-D).

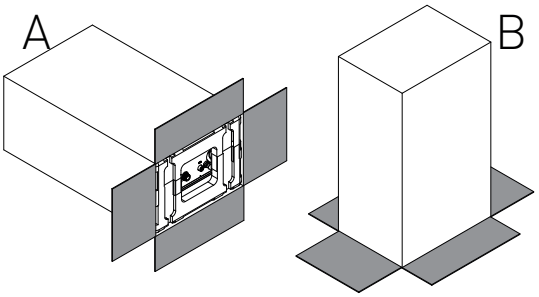

fig. 1

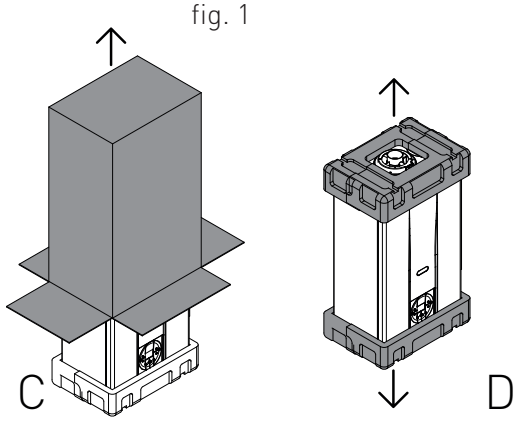

1.1.5. BOILER OVERALL DIMENSIONS

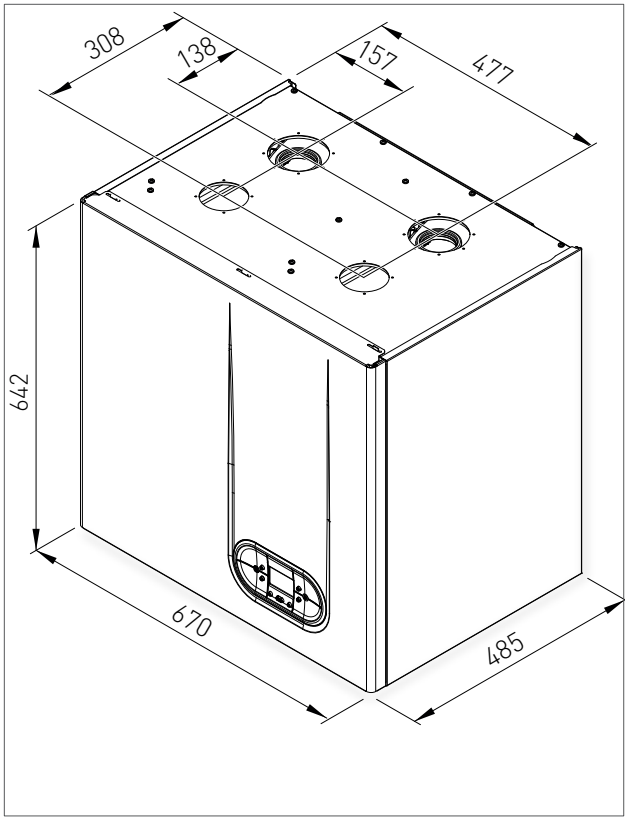

1.1.6. JIG

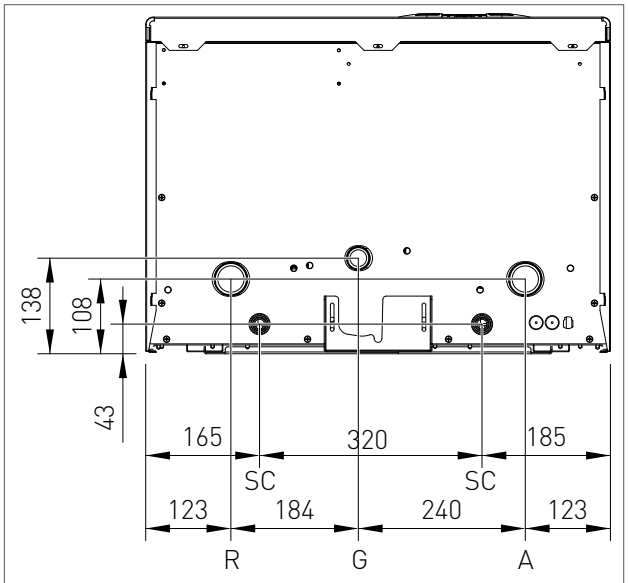

R-	HEATING RETURN	Ø 1" 1/2
G-	GAS	Ø 1"
A-	HEATING FLOW	Ø 1" 1/2
SC-	CONDENSATE DRAIN	Ø 25 mm

1.1.7. OVERALL DIMENSIONS OF THE HEATING ONLY MODULE

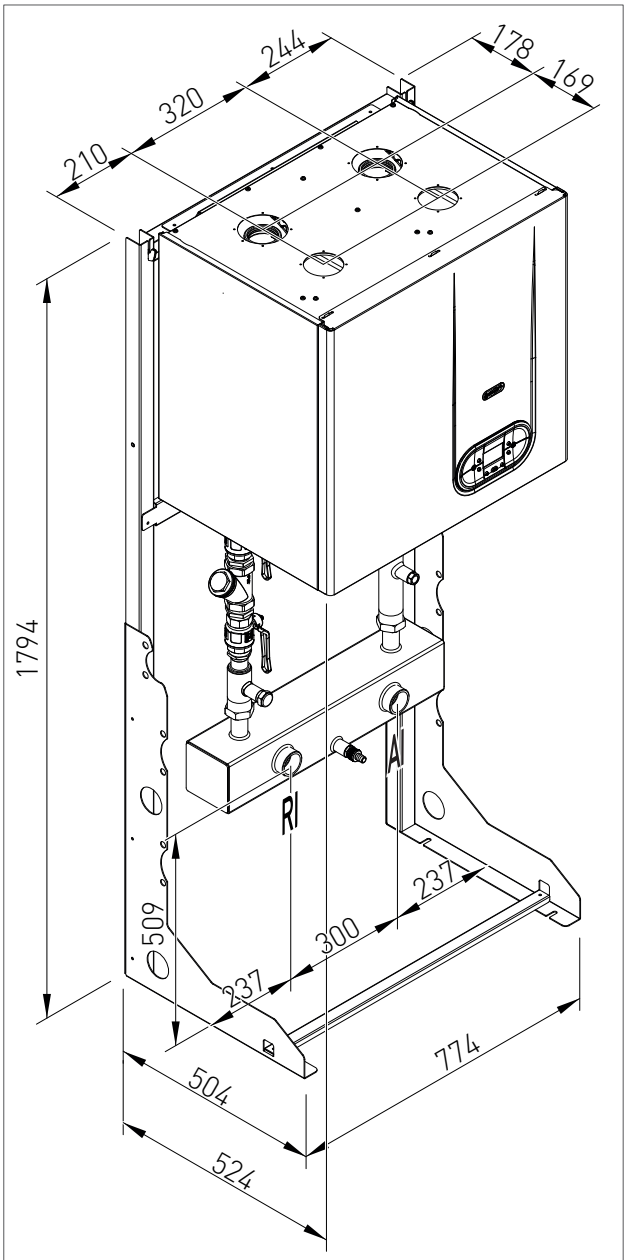

RI	RETURN SYSTEM	Ø 1"1/2
AI	DELIVERY SYSTEM	Ø 1"1/2

1.1.8. OVERALL DIMENSIONS OF THE MODULE FOR REMOTE BOILER SUPPLY

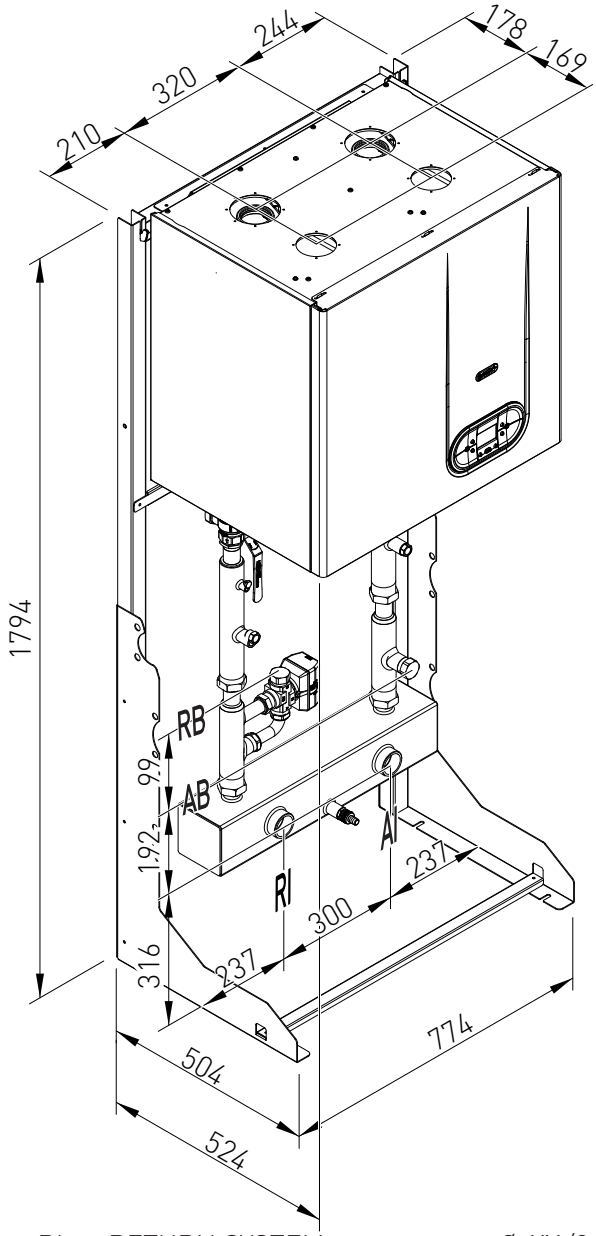

RI	RETURN SYSTEM	Ø 1"1/2
AI	DELIVERY SYSTEM	Ø 1"1/2
RB	HEATING FLOW TO DHW STORAGE CYLINDER	Ø 1"
AB	HEATING FLOW TO DHW STORAGE CYLINDER	Ø 1"

1.1.9. MECHANICAL SYSTEM DIAGRAM

HEATING ONLY INSTALLATION

The boiler can manage a heating system at a fixed point delivery temperature or in climatic compensation with an external probe, managing the modulation according to the actually requested thermal load.

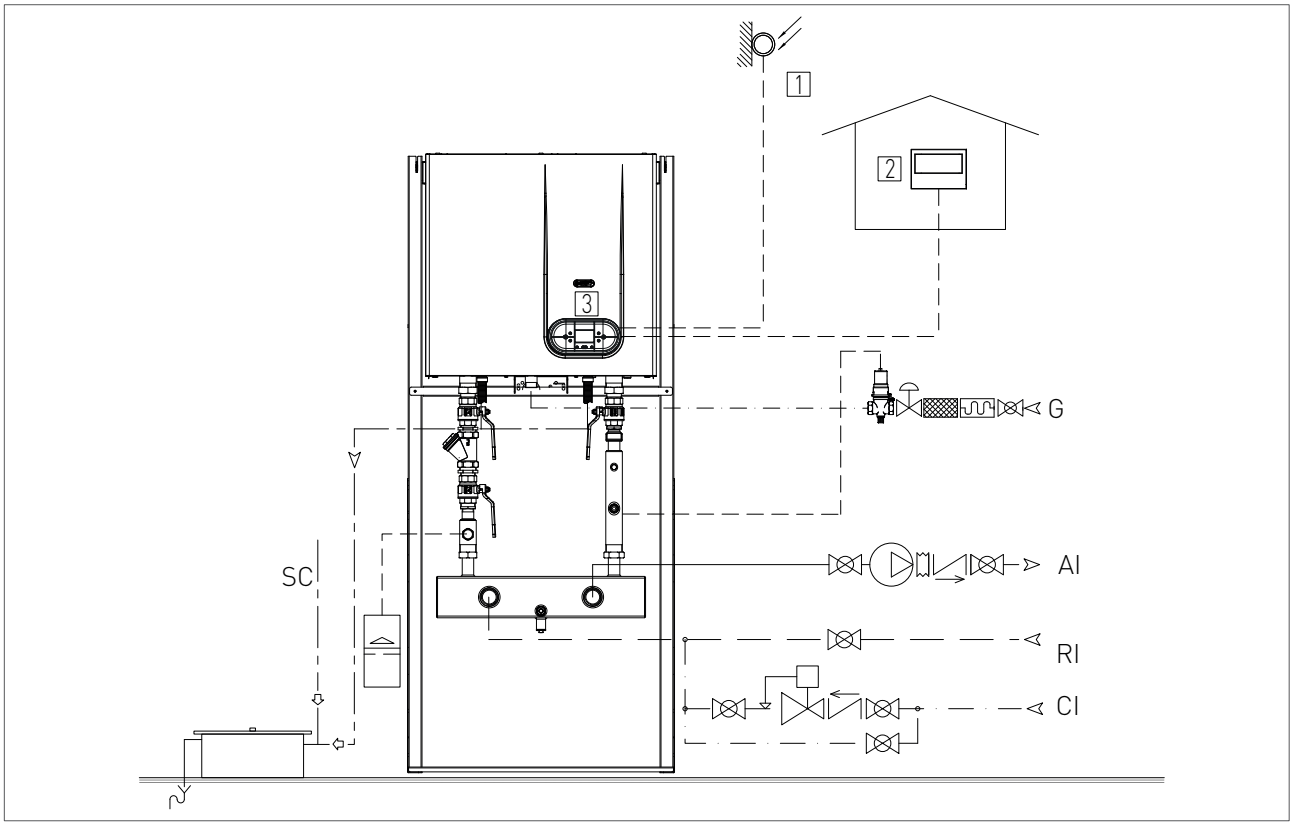

DESCRIPTION

1	EXTERNAL PROBE
2	REMOTE OPEN THERM
3	CONTROL PANEL
AI	LOAD SYSTEM
RI	RETURN SYSTEM
CI	DELIVERY SYSTEM
G	GAS
SC	FUME EXHAUST SYSTEM CONDENSATE

HEATING INSTALLATION + REMOTE BOILER SUPPLY SYSTEM

The boiler can manage a heating system at a fixed point delivery temperature or in climatic compensation with an external probe, managing the modulation according to the actually requested thermal load.

The boiler probe activates the system in order to pre-heat the boiler, the boiler will be put into domestic circuit mode and the deviating valve switches to the remote boiler.

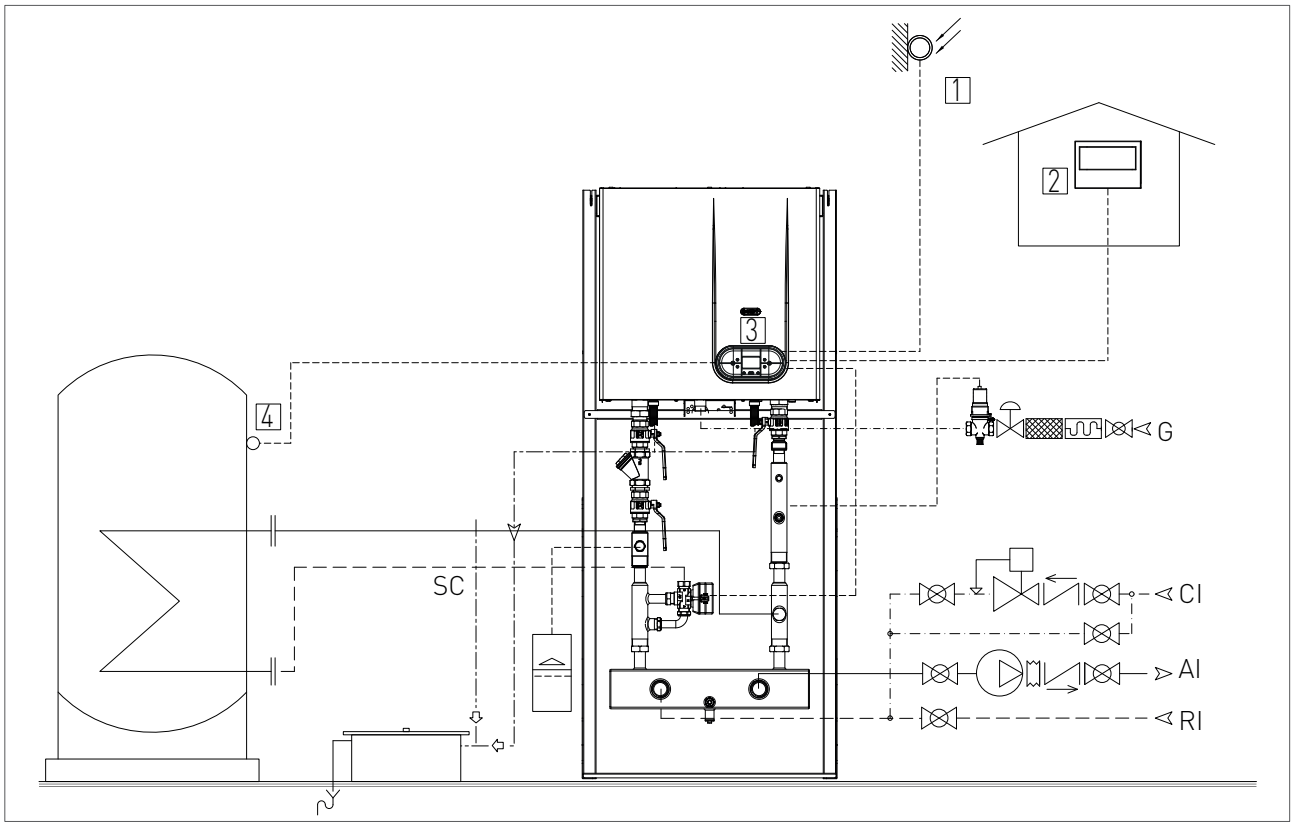

DESCRIPTION

1	EXTERNAL PROBE
2	REMOTE OPEN THERM
3	CONTROL PANEL
4	REMOTE BOILER NTC PROBE
AI	LOAD SYSTEM
RI	RETURN SYSTEM
CI	DELIVERY SYSTEM
G	GAS
SC	FUME EXHAUST SYSTEM CONDENSATE

HEATING INSTALLATION + REMOTE HEAT EXCHANGER FOR INSTANTANEOUS D.H.W. PRODUCTION

The boiler can manage a heating system at a fixed point delivery temperature or in climatic compensation with an external probe, managing the modulation according to the actually requested thermal load.

In the version with heat exchanger for instantaneous D.H.W. production, the flow-meter at cold water inlet, detects the sanitary request, switches the diverter valve on the exchanger and activates the boiler in sanitary mode. The NTC temperature probe at the exit of the exchanger detects the D.H.W. outlet temperature ensuring the Setpoint set by the user.

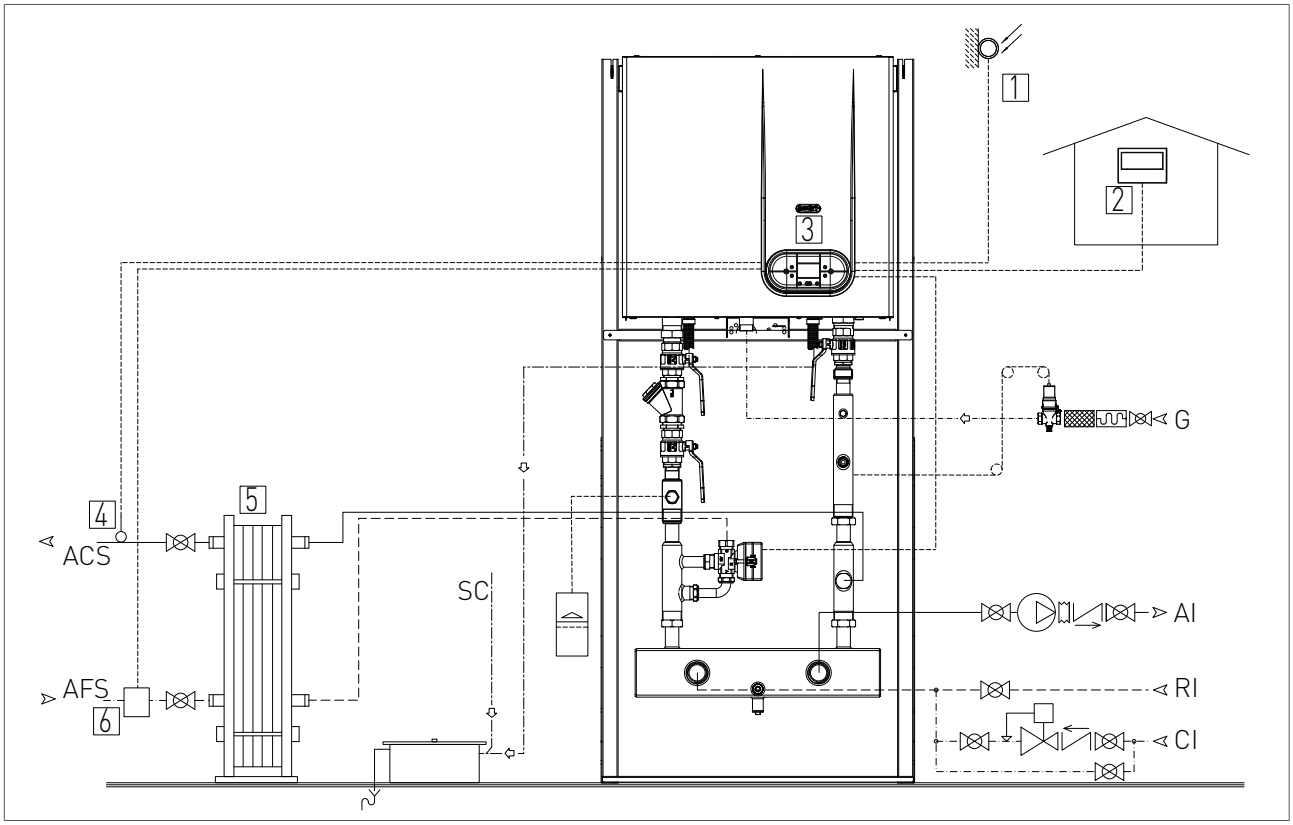

DESCRIPTION

1	EXTERNAL PROBE
2	REMOTE OPEN THERM
3	CONTROL PANEL
4	NTC PROBE
5	DHW PLATE EXCHANGER
6	FLUXMETER
ACS	DOMESTIC HOT WATER OUTLET
AFS	DOMESTIC COLD WATER INLET
AI	LOAD SYSTEM
RI	RETURN SYSTEM
CI	DELIVERY SYSTEM
G	GAS
SC	FUME EXHAUST SYSTEM CONDENSATE

1.1.10. SYSTEM ACCESSORIES

DIVERTER VALVE KIT

The kit allows combining the thermal generator with a remote boiler for the production of domestic hot water (cod. 26097LP, fig. 1).

In this configuration, it is possible to manage the domestic circuit in an independent manner, by implementing a diverter valve which ensures the power supply of the serpentine upon the pre-heating request of the boiler.

The kit is completed with a probe for the external boiler and with a power supply cable of the diverter valve which is connected directly to the electronic board of the generator.

INSTANTANEOUS D.H.W. PRODUCTION KIT

The kit allows instantaneous D.H.W. production management through a remote heat exchanger. The instantaneous D.H.W. production kit (code 65-00819, fig. 1) includes the diverter valve kit described above and a flow-meter to be installed at cold water inlet.

HYDRAULIC SEPARATOR

In order to always ensure to the heat generator an operation without problems related to two low heat capacities (due, for example, to closed radiators or to impurities of various type), it is strictly necessary to install a trip unit, as an alternative, a heat exchanger which separates the hydraulic circuit.

Choosing a separation system in the detriment of another is exclusively imposed by the type of the system.

In case of a new system or in case of replacement of the generator with the possibility to wash the water pipes, it is recommended to install a hydraulic separator (code 12-01735, fig. 1).

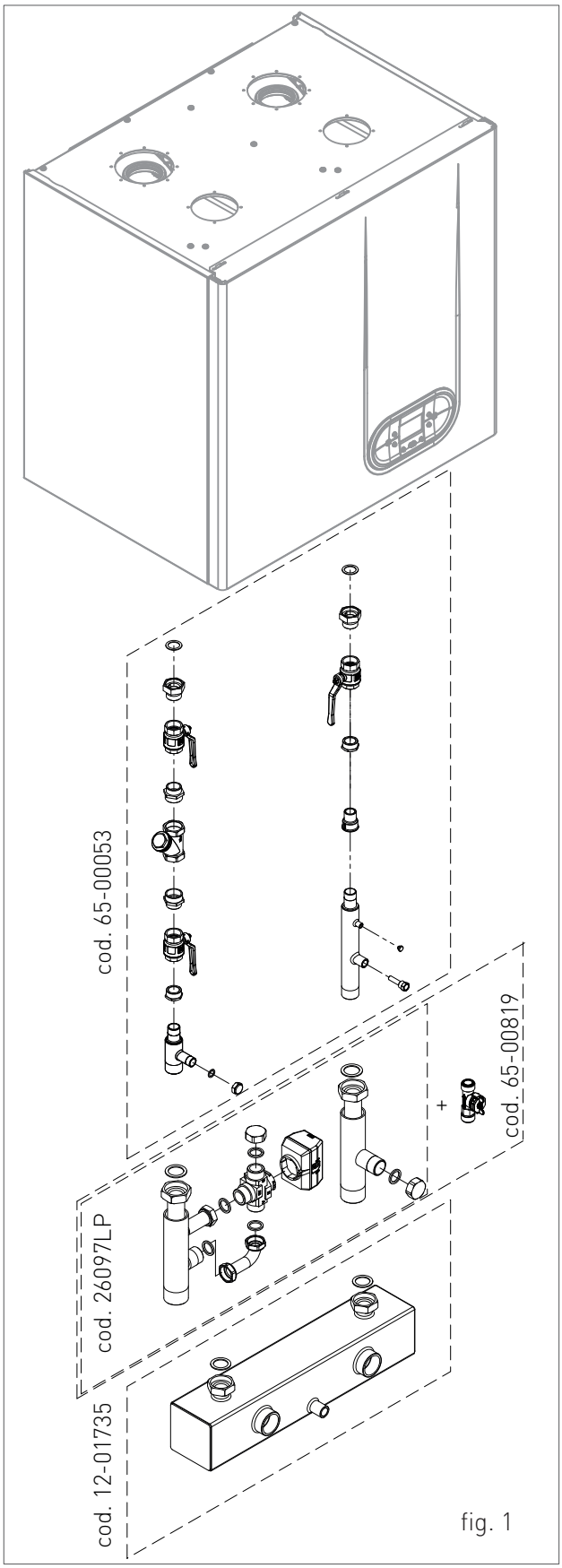

fig. 1

The hydraulic separator creates an area with reduced load loss, which allows hydraulically rendering independent the primary and secondary circuits connected to it. With the hydraulic separator you can thus have a production circuit with constant heat capacity and a distribution circuit with variable heat capacity, operation conditions typically specific to modern air-conditioning systems.

Particular attention should be given, during the design phase, to possible temperature variations to which the circuits can be subject due to the generated mixing inside the hydraulic separator.

A secondary circuit with a heat capacity higher than the circulatory one of the primary circuit generates, in fact, by means of the hydraulic separator, a delivery temperature lower than the one of the primary circuit.

KIT PRODUZIONE ACS ISTANTANEA SU TELAIO MODULARE

Il kit consente di gestire la produzione di ACS istantanea mediante uno scambiatore di calore installato sul telaio modulare. Il kit (cod. 65-00837, fig. 2) oltre ai tubi e alla staffa di supporto include lo scambiatore da 50 piastre, un flussimetro da installare sul tubo in ingresso acqua fredda e una sonda sanitaria a clip da inserire sul tubo in uscita acqua calda.

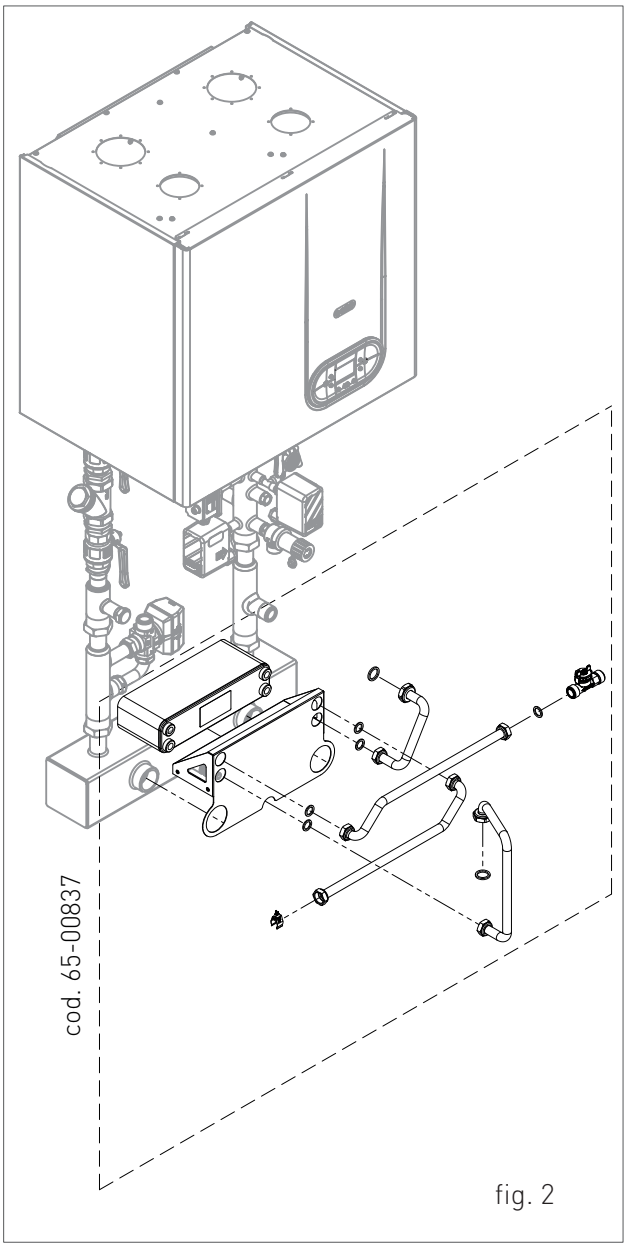

fig. 2

1.1.11. CIRCULATOR PREVALENCE/FLOW DIAGRAM

Wilo-Yonos PARA RS 15/7.5

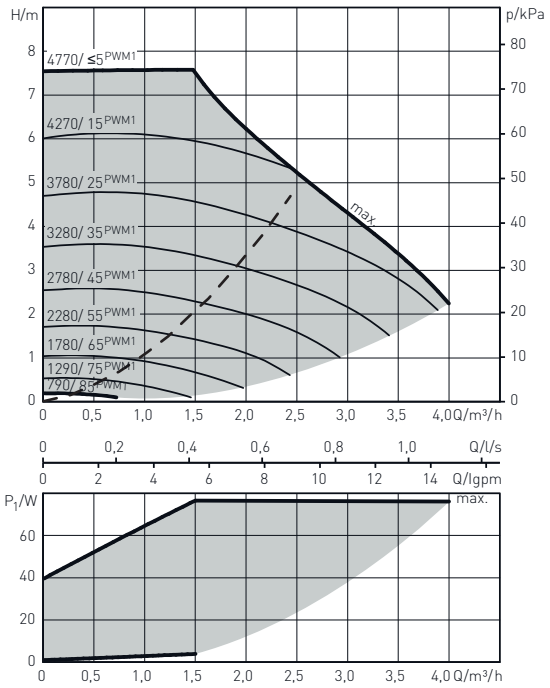

– – – Load losses of only one active unit

1.1.12. GENERATOR INSTALLATION

MINIMAL TECHNICAL SPACES

In order to allow the access inside the boiler for maintenance operations, you have to respect the minimum technical spaces indicated in figure 1.

WARNING

The incorrect slopes of the device can cause the incorrect discharge of condensate by means of the discharge duct with consequent condensate stagnation inside the condensate module.

WARNING

The boiler must be installed only on a vertical solid wall, able to sustain its weight.

WARNING

The boilers have the electrical protection degree IPX5D. The outdoor installation in partially protected environments (platform roof, balcony - see fig. 2) is allowed in compliance with the related standards. The Company is not held liable for installations in environments with a temperature under –10°C or non-compliant with the above indications.

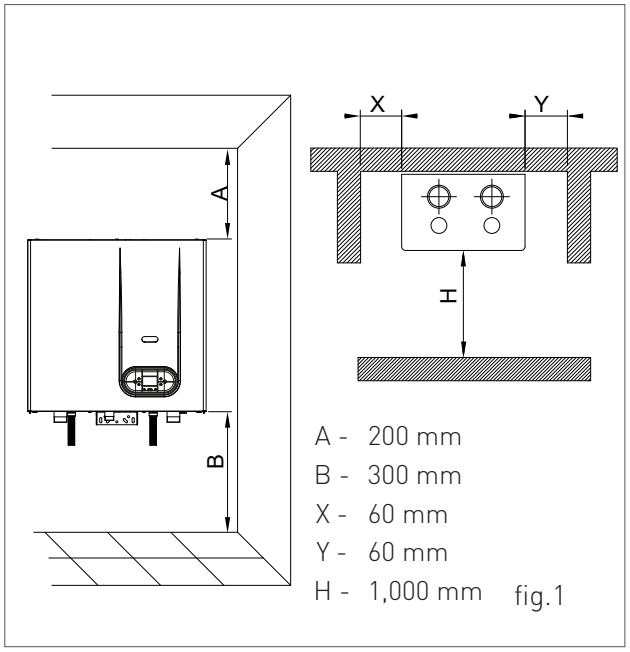

fig.1

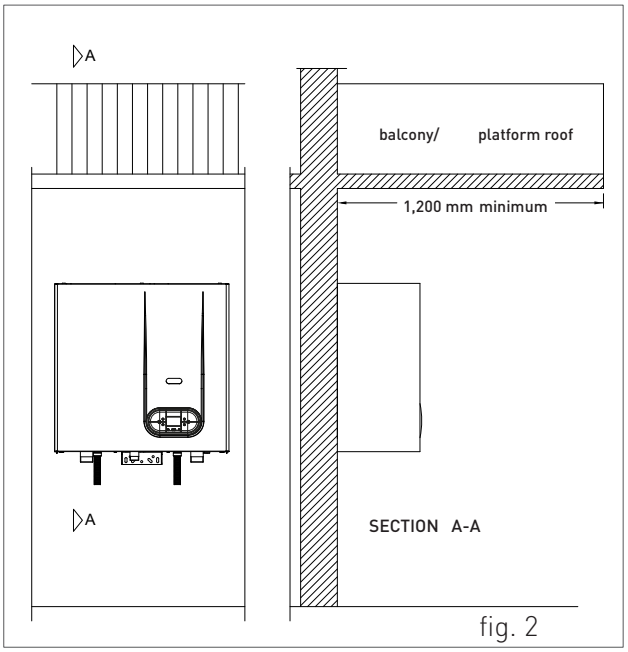

fig. 2

WALL MOUNTING BY MEANS OF FIXING BRACKET

WARNING

In order to avoid condensate stagnations inside the condensate module, check that the boiler is slightly inclined towards the rear part (1-1.5°) in order to evacuate the condensate.

WARNING

The device must be installed only on a vertical solid wall, able to sustain its weight.

In order to fix the thermal generator on the wall, proceed as follows:

1. fix on the wall (fig. 1), using the fisher, the upper bracket;
2. hook the eyelets of the boiler into the adequate hooks (fig. 2);
3. unscrew the fixing screws of the lower bracket (fig. 3) ensuring the free sliding of the bracket (fig. 4) towards the boiler;
4. adjust the inclination of the boiler (fig. 5) by sliding the lower bracket ensuring an inclination of the boiler, against the vertical, of about 1–1.5°.

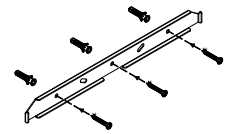

fig.1

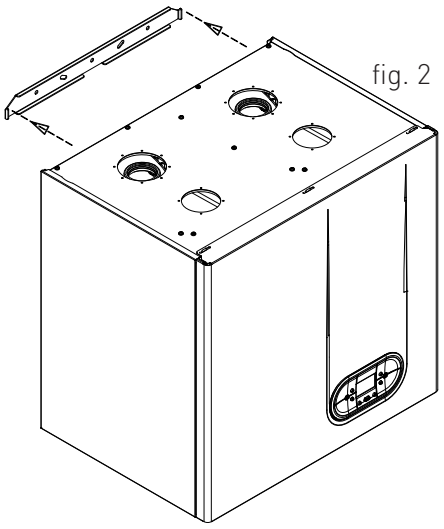

fig. 2

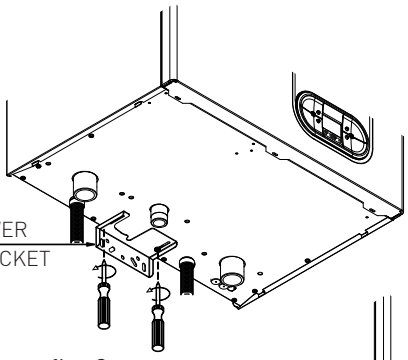

fig. 3

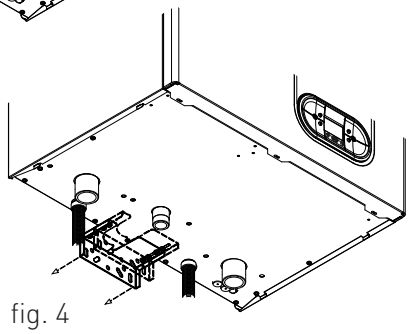

fig. 4

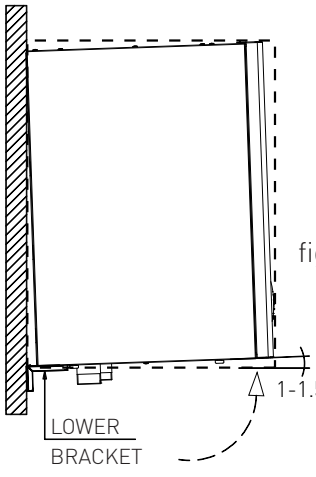

fig. 5

INSTALLATION ON SELF-SUPPORTING FRAME

WARNING

During the installation of the heat generator, pay maximum attention to the installation of the self-supporting frame. The frame must rest on a perfectly flat surface and, when supported against the wall, the latter must be perfectly angled. The incorrect slopes of the device can cause the incorrect discharge of condensate by means of the discharge duct with consequent condensate stagnation inside the condensate module. The correct installation of the frame allows obtaining, acting on the lower bracket, a counterslope of the device against the perpendicular.

In order to mount the frame and therefore the generator, proceed as follows:

1. check the angle of the wall with the floor;
2. assemble the side profiles 3 and 4 on the pillars 1 and 2 (fig. 1);
3. assemble the side pillars 1 and 2 on the horizontal crossbeam 5;
4. assemble the central crossbeam 8 and the lower one 7;
5. complete the assembly, position the frame binding it to the wall 9 (if provided) and on the floor 10;
6. mount the upper bracket 6 and hook the eyelets of the boiler into the adequate hooks 11;
7. make sure that the frame is angled, adjust the inclination of the boiler by means of the lower bracket (see "Wall mounting by means of fixing bracket") ensuring an inclination of the boiler, against the vertical, of about 1–1.5°;
8. complete the installation by assembling the hydraulic components.

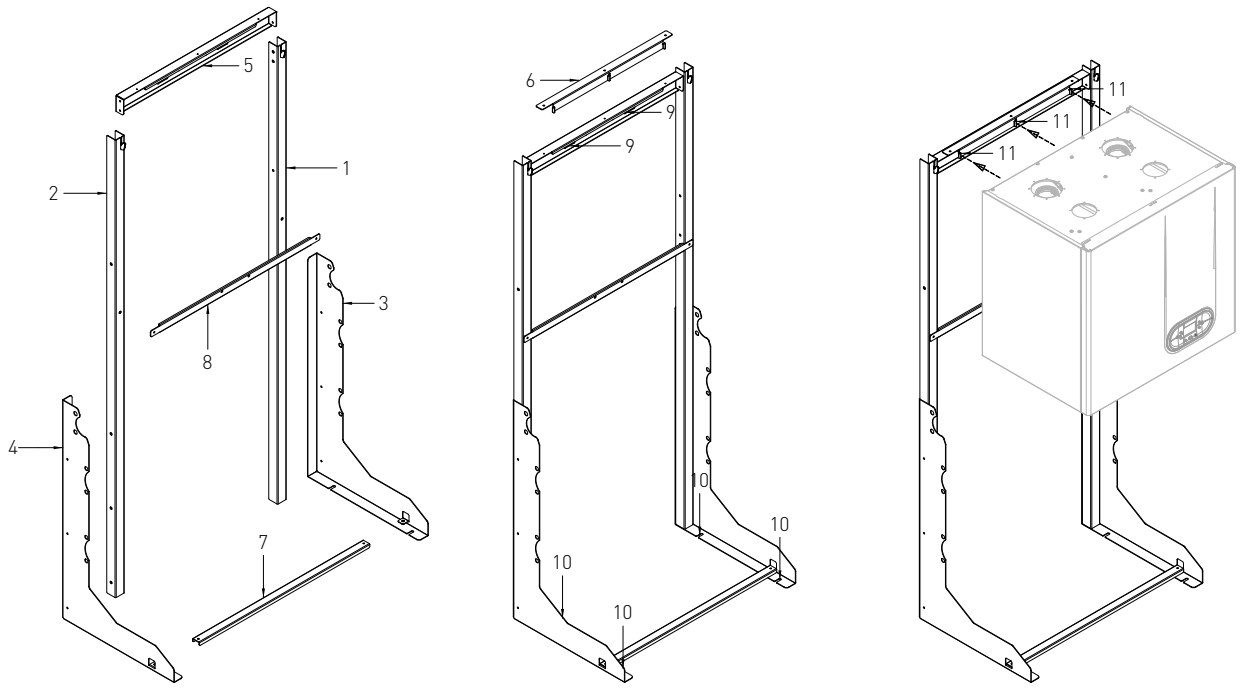

fig.1

1.1.13. HYDRAULIC CONNECTION

DANGER

Make sure that the tubes of the water and heating plant are not used as grounding system for the electrical plant. There are not suitable for such use.

WARNING

To prevent voiding the warranty and to ensure the proper operation of the boiler, please wash the plant (if possible when hot) with suitable pickling or descaling solutions in order to remove the impurities coming from tubes and radiators.

WARNING

If the boiler is installed in a hydrostatic position lower than those of the user devices (radiators, fan coils, etc.), mount the shut-off valves on the domestic water heating circuit to ease the performance of the maintenance operations if it is necessary only to empty the boiler.

WARNING

When connecting the equipment to water supply, avoid excessive bending and recovery operations from any off axis positioning that may damage the tubes causing leaks, malfunction or early wear.

WARNING

In order to avoid any vibrations and noises, do not use tubes with small diameters or elbows with small radius and significant cut-off of the passage sections.

WARNING

Connect the boiler safety drains to a discharge funnel. The manufacturer is not responsible for any floods due to safety valve opening in case of plant overpressure.

DOMESTIC CIRCUIT

In order to prevent limestone build-up and damages to the domestic water heat exchanger, the hardness of the domestic supply water should not exceed 15 °f. However, please check the characteristics of the water used and install suitable treating devices.

The heat exchanger coil cleaning frequency depends on the hardness of the supply water and on the presence of solid residues or impurities inside the water that are often present in case of recently installed plants. Based on the characteristics of the infeed water, you should install suitable water treating devices, for residues presence please install a line filter.

The pressure of the cold infeed water should be between 0.5 and 6 bar. In case of greater pressure values, please install a pressure reducer upstream from the boiler.

HEATING CIRCUIT

In order to avoid any scale or deposits on the primary exchanger, the hardness of the heating circuit infeed water should not exceed 25 °f. However, please check the characteristics of the water used and install suitable treating devices.

This treatment is mandatory if frequent episodes of return water or partial or total emptying of the plant occur.

WARNING

In case the boiler is installed as part of a low temperature circuit, please install a safety thermostat on the heating flow, which can stop the boiler activity in case of high heating flow temperature. The company assumes no liability for damage caused to persons or for failure to comply with these instructions.

1.1.14. CHARACTERISTICS OF THE WATER OF THE SYSTEM

For a correct operation of the system, it is necessary to make sure that:

1. The system does not present losses or that the most obvious are at least eliminated;

2. If an automatic filling system is present, a litre meter must be installed in order to precisely know the extent of any losses;

3. The filling in of the system and the top ups are performed with softened water in order to reduce the total hardness. The water must also be treated in order to maintain the pH within the provided threshold so as to avoid corrosion phenomena.

4. Either on new systems or on replacements, the system must be fitted with efficient systems which ensure the elimination of the air and impurities: Y filters, micro impurity separators and micro bubbles of air separators;

5. Avoid draining the water of the system during the routine maintenance even if it is about apparently insignificant quantities: for example, in order to clean the filters, provide the system with adequate shut-off valves;

6. Always perform an analysis of the water of the system before opening the communication between the new generator and the system, in order to establish if the parameters present in the water indicate the need to fully drain the system, to use the water already present in the system or to chemically wash the system using utility water adding a detergent when it is suspected that the system might be dirty or particularly clogged and at the next loading with new treated water.

Water treatment

In order to preserve the integrity of the water-fume exchanger and to guarantee optimal thermal exchanges, it is necessary that the water of the primary circuit, circulating inside the exchanger of the condensate boiler, has the characteristics defined and constant in time. To obtain this, it is fundamental to perform a series of system preparation and maintenance operations such as:

• washing the system;

• check the characteristics of the water of the system;

The type of treatment to be performed will be chosen based on the characteristics of the water to treat, of the type of system and on the requested purity limits

Oxygen

A certain amount of oxygen always enters the system, both during the filling phase and during the use in case of reintegration or presence of hydraulic components without oxygen barriers. The reaction between the oxygen and the stainless steel creates corrosion and forms sludge. While the water fume exchanger is made of stainless steel, and therefore it is not subject to corrosion, the sludge created in the carbon steel system is deposited in the warm points, including the exchanger. This has the effect to reduce the heat capacity and thermally insulate the active parts of the exchanger, which might cause damages.

The precautions to limit the phenomena are:

- Mechanical systems: a deaerator combined with a sludge remover, correctly installed, reduce the quantity of oxygen circulating inside the system.

- Chemical systems: the additives allow the oxygen to dissolve in water.

Hardness

The filling and make-up water hardness brings a certain amount of limestone into the system. It attacks the warm parts of the exchanger, thus creating load losses and thermal insulation losses on the active parts. This phenomena can cause damages.

The filling and make-up water of the system, if it does not fall under the values indicated below, should be softened. Moreover, additives can be added in order to maintain the limestone into the solution. The hardness must be periodically checked and registered.

Acidity	7 < pH < 8.5	
Conductivity	< 400	µs/cm (at 25°C)
Chlorides	< 125	mg/l
Iron	< 0.5	mg/l
Copper	< 0.1	mg/l

If the above indicated limits are exceeded, a water must be chemically treated.

The type of treatment to be performed will be chosen based on the characteristics of the water to treat, of the type of system and on the requested purity limits.

1.1.15. SYSTEM FILLING

WARNING

For system filling use only clean tap water. In order to prevent limestone build-up and damages to the domestic water heat exchanger, the hardness of the domestic supply water should not exceed 15° Fr. However, please check the characteristics of the water used and install suitable treating devices.

WARNING

If the system is filled by adding ethylene glycol-type chemical agents you have to install on the loading system a hydraulic trip unit in order to separate the heating circuit from the domestic circuit.

Before powering up the boiler, fill the system as follows:

1. slightly loosen the cap of the jolly valve placed on the top of the condensing block to release the air form the top of the system (1-fig.1);
2. check that the jolly valves vent the air present in the system are not blocked;
3. connect a rubber pipe to the draining tap placed on top of the condensing heat exchanger (2-fig.1);
4. open the general domestic water input tap and load the system by exhaling all the air;
5. use pressure gauge present in the system to make sure that the system pressure reaches the design value;
6. after performing this operation, make sure that the loading tap is properly closed.
7. Open the air relief valves of the radiators and check the air removal process. When the water starts to leak close the radiators air relief valves.
8. If after performing these operations you observe a decrease of the water pressure inside the system, open once again the loading tap until the pressure gauge reaches the design pressure.

fig. 1

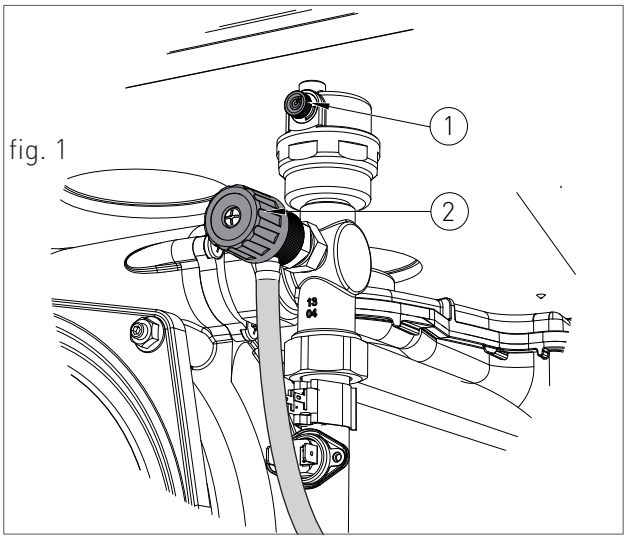

1.1.16. CONDENSATE DRAIN

FILLING THE CONDENSATE DRAIN SIPHON

Before starting the boiler you have to fill the condensate collection siphon in order to avoid fuel reflux through the siphon.

Fill the condensate collection siphon as follows:

› Unscrew the screw "P" (fig. 1), extract the siphon and fill it with water up to the highest point "T" (fig. 1);

› Connect the adequately prepared flexible condensate drain tube to a disposal system (it is necessary to neutralise the condensate if the material out of which the canal system where the condensate arrives is composed presents a corrosion risk; please see paragraph 'CONDENSATE NEUTRALISER'). The condensate can be drained directly in the sewerage system by inserting an easily serviceable siphon.

WARNING
After the first months of operation of the device, it is recommended to clean the condensate collection siphon from any deposits deriving from the first transit of the condensate inside the technical components of the boiler. Such deposits might cause a malfunction of the siphon.

CONDENSATE DRAIN

The boiler produces a significant quantity of condensate during operation. This condensate has an acid pH of 3-5. Observe the national standard in force and the local regulations for the disposal of the condensate produced by the boiler.

The designer, according to the power of the system and the intended use of the building, is bound to evaluate the acceptance of systems in order to neutralise the acid condensate.

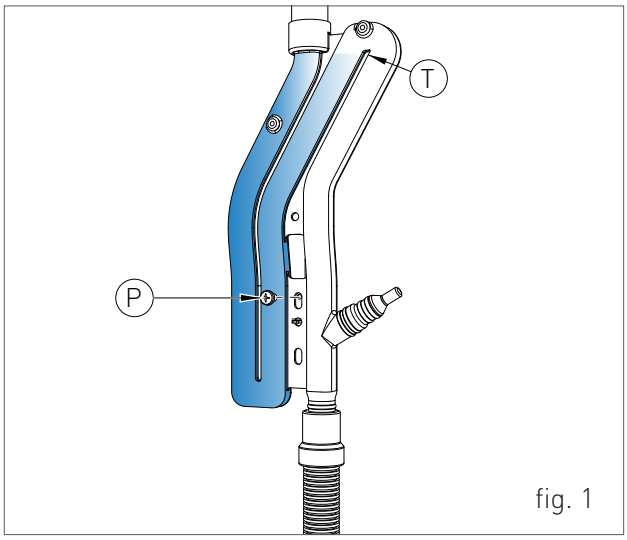

fig. 1

The system must be performed so as to avoid the freezing of the condensate. Before putting into operation the device, check the correct evacuation of the condensate.

WARNING
Before connecting the condensate collection siphon to the drain tube, check that the slope of the boiler is ensured according to the indications from chapter 'INSTALLATION OF THE BOILER'.

WARNING
Correctly connect the condensate collection siphon of the boiler to a draining system by adding the slope to the drain of the condensate of the fume exhaust duct. Where possible, it is recommended to perform such connection by means of a collection glass in order to check the correct discharge of the condensate avoiding stagnations that might cause dangerous returns of the condensate to the boiler.

In order to connect the condensate draining to the draining system, use only corrosion-resistant materials with an adequate diameter.

CONDENSATE NEUTRALISER

Assemble the condensate neutralisation box, fitted with granulate and active carbons for a treated power up to 350 kW (see fig.2). The device allows neutralising the condensate which is collected inside the boiler and/or in the fume discharge systems made of stainless steel, plastic, glass or ceramic.

The acid condensate, inserted into the neutralisation box, follows a mandatory path for two phases; the first one, filtration of nitrates and sulphates by means of active carbons contained in the first tube line, in the second one, the pH is increased.

The acidity of the condensate can be checked by using litmus paper in order to determine the pH. Then, the neutralised condensate can be transported into the sewage system.

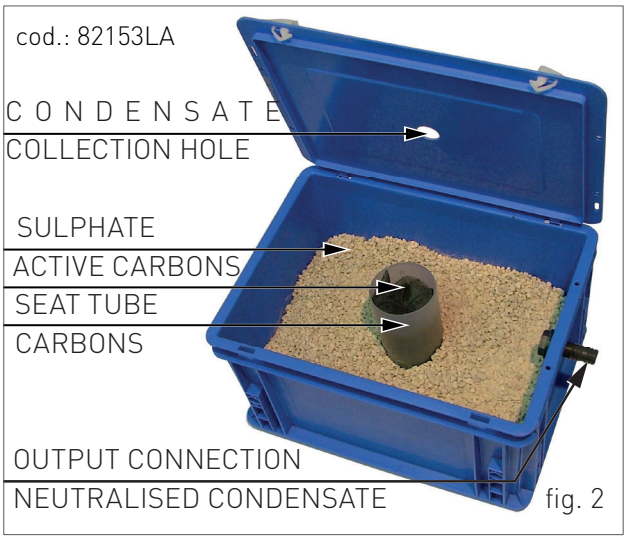

fig. 2

MAINTENANCE

The pH parameters must be comprised between < 7 and 8.5 >.

Every six months, it is necessary to establish the PH of the treated condensate inside the neutraliser. Immerse a litmus paper (or a suitable digital tool) in the condensate near the tapped draining connection for about 2 seconds and thus lay it on a white paper. After about 30 seconds, it is possible to compare with the coloured scale. The neutral point is on the value 6.8-7; at a lower value, the condensate is acid, at a higher value, it is base].

If necessary, replace the active carbon and the reagent granulate.

1.1.17. ANTI-FREEZE PROTECTION

The boiler is protected against freezing thanks to the electronic board preparation with functions that start the burner and heat the concerned parts when their temperature goes below the minimum pre-set values, protecting the boiler up to an external temperature of -10 °C.

The device starts when the hot water temperature goes below 8 °C, automatically starting the burner until the heating flow water temperature reaches the 30°C and, in presence of a return sensor, until the heating return water temperature reaches the 20°C.

The system starts even if on the display appears "OFF", as long as the boiler is connected to the power (230 V) and gas supply.

For long periods of standby, please empty the boiler and the plant.

If the temperature goes below -10° centigrades, please fill the plant with anti-freeze liquid (CLEANPASS FLUIDO AG cod. 98716LA) and insert and electrical resistances kit (cod. 82259LP).

DILUTION PERCENTAGE OF CLEANPASS FLUIDO AG

ANTIFREEZE - ETHYLENE GLYCOL (%) VOLUME	TEMPERATURE FREEZING POINT (°C)
20	-7.5
30	-13
35	-18
40	- 22.5
45	-28
50	-33.5
55	-42
60	-50

RECOMMENDED MINIMUM PERCENTAGE OF GLYCOL : 20 %

1.1.18. GAS CONNECTION

DANGER

In order to connect the gas connector of the boiler to the supply pipe use a stop seal of an appropriate size and material. The use of hemp, teflon tape or similar materials is strictly forbidden.

BEFORE PERFORMING THE GAS CONNECTION, MAKE SURE THAT:

› please make sure the gas supply to the boiler is equipped with an interception tap, located underneath the boiler itself and approved as per the applicable regulations.

› the gas adduction line complies with the standards and regulations in force;

› the tubing's section suits the requested capacity and its length;

› the tubing is equipped with all safety and control devices required by the standards in force;

› the internal and external seals of the gas infeed plant are checked;

› the device is suitable for use with the type of gas available by checking the boiler data plate (placed on the inner side of the front casing. If they do not match you must take the necessary measures to adapt the boiler to another type of gas (see chapter GAS TRANSFORMATION);

› the gas supply pressure falls within the values indicated on the data plate.

1.1.19. ELECTRICAL CONNECTION

DANGER

The equipment is electrically safe only if it is properly connected to an efficient grounding system, performed in compliance with the safety standards in force. You should check this essential safety requirement. If in doubt, request an accurate check of the electrical system performed by qualified staff, as the manufacturer is not responsible for any damages caused by lack of grounding system.

› Make sure that the electrical systems is suitable for the maximum power absorbed by the equipment, value indicated on the data plate.

› make sure that the cables section is appropriate for the maximum power absorbed by the equipment and that it is however not lower than 1 mm^2.

› The equipment works with alternating current of 230 V and 50 Hz. The electrical connection must be performed using an all-pole switch with an opening of at least 3 millimetres between contacts placed upstream from the device.

WARNING

Make sure that the phase and neutral cables connection is performed in compliance with the wiring diagram (see chapter POWER SUPPLY).

WARNING

It is strictly forbidden the use of adaptors, multiple plugs and/or extensions for the general power supply of the equipment from the electrical network.

1.1.20. POWER SUPPLY

To power the boiler connect the electrical cables to the terminal inside the control panel as follows:

DANGER
Cut off the voltage from the main switch.

› remove the boiler's front casing (refer to chapter ACCESSING THE BOILER).

› loosen the two screws and remove the plate "A" (see fig. 1).

› after removing the plate, connect the electrical cables to terminal "B" (see fig. 1):

- the yellow/green cable to the terminal marked with grounding symbol "⏚".
- the blue cable to the terminal marked with "N".
- the brown cable to the terminal marked with "L".

After performing these operations, remount plate "A" and the front casing.

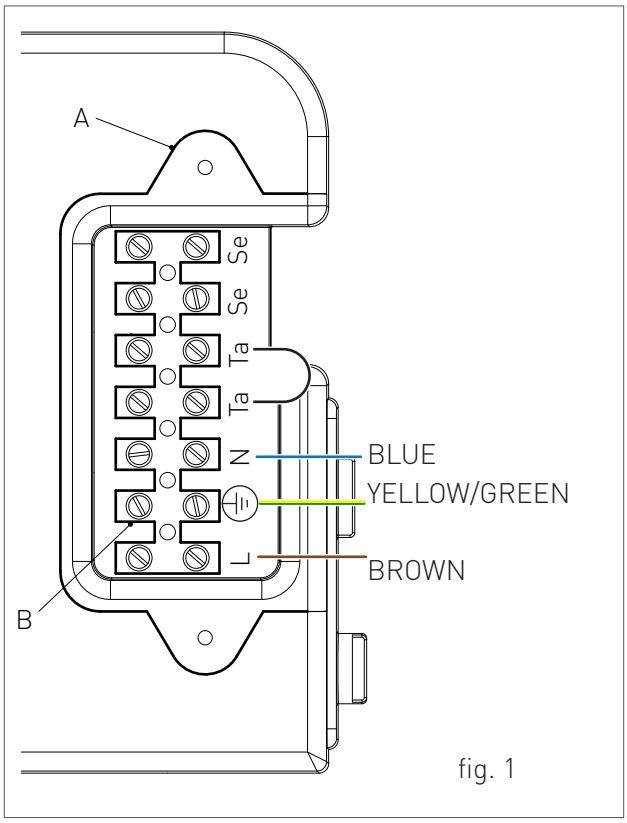

fig. 1

1.1.21. OPTIONAL ELECTRICAL CONNECTIONS

The cables should be inserted inside the boiler using the cable glands 'P1' and 'P2' placed under the board (see fig. 1). Make a hole on the cable gland, smaller than the cable diameter, to make sure that the air cannot pass through.

To wire the optionals below:

• (SE) EXTERNAL TEMPERATURE PROBE CODE 73518LA

• (TA) ENVIRONMENT THERMOSTAT

• (CR) REMOTE CONTROL OPEN THERM CODE 40-00017

use the terminal placed inside the control panel as follows:

DANGER
Cut off the voltage from the main switch.

› remove the front casing of the boiler (see chapter ACCESSING THE BOILER); unscrew the screws and remove plate "A" (see fig. 2).

› After removing the plate, connect the electrical cables to terminal "B" (see fig. 2):

· For the external temperature Probe connect the two non-polarized conductors to the Se-Se contacts.

· For the environment Thermostat or Remote control, first remove the bridge on the Ta-Ta contacts and then connect the two non-polarized conductors to the Ta-Ta contacts.

After performing these operations, remount plate "A" and the front casing.

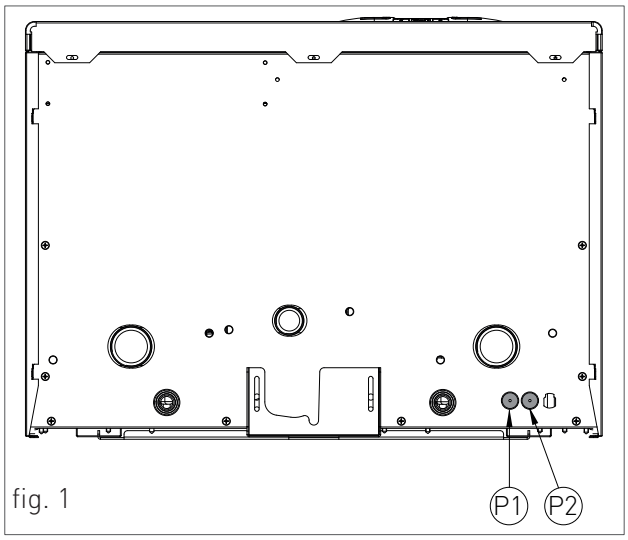

fig. 1

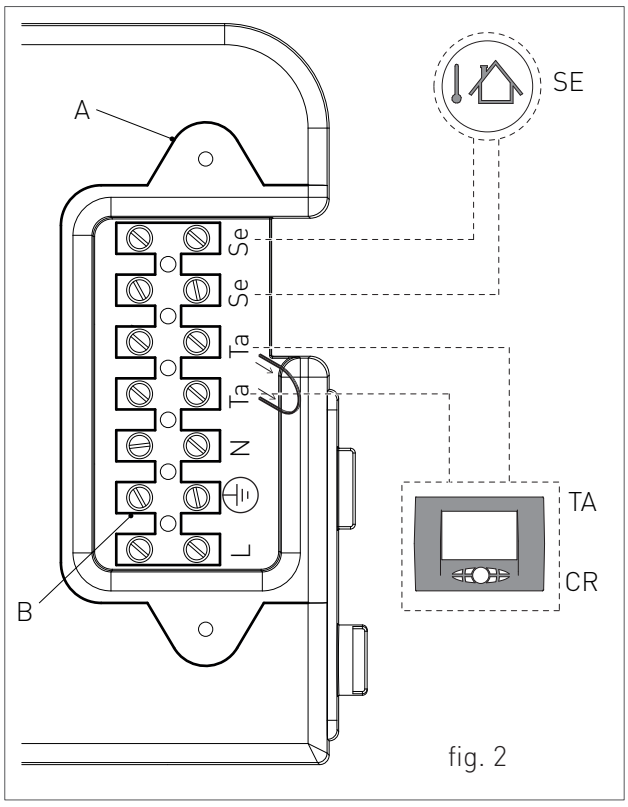

fig. 2

NOTA BENE: In case of simultaneous presence of external probe and remote control, the modulation board only sends the external temperature value to the remote device without using it for modulation. The communication between board and remote control takes place independently from the boiler's operating mode and after establishing the connection, the display shows the symbol '⇄'.

To wire the optionals below:

• (TP) DOMESTIC HOT WATER PRE-HEATING DEACTIVATION TIMER

• (CT) TELEPHONE DIALER

• BUS 0-10V

• (SVZ) ZONE VALVES MANAGEMENT KIT CONNECTED TO A REMOTE CONTROL COD. 65-00030

• (AG) GENERIC DEVICE. MAXIMUM CURRENT 3A WITH 250VAC (SEE RELAY MANAGEMENT AT PARAMETER P69)

operate on the P.C.B. placed inside the control panel as follows:

DANGER

Cut off the voltage from the main switch.

› remove the boiler's front casing (refer to chapter ACCESSING THE BOILER).

› remove the back plate of the control panel (see chapter ACCESSING THE MASTER ELECTRONIC BOARD).

› after removing the back plate, connect the items below to the electronic board (see fig. 1):

After performing these operations, remount the back plate and the front casing.

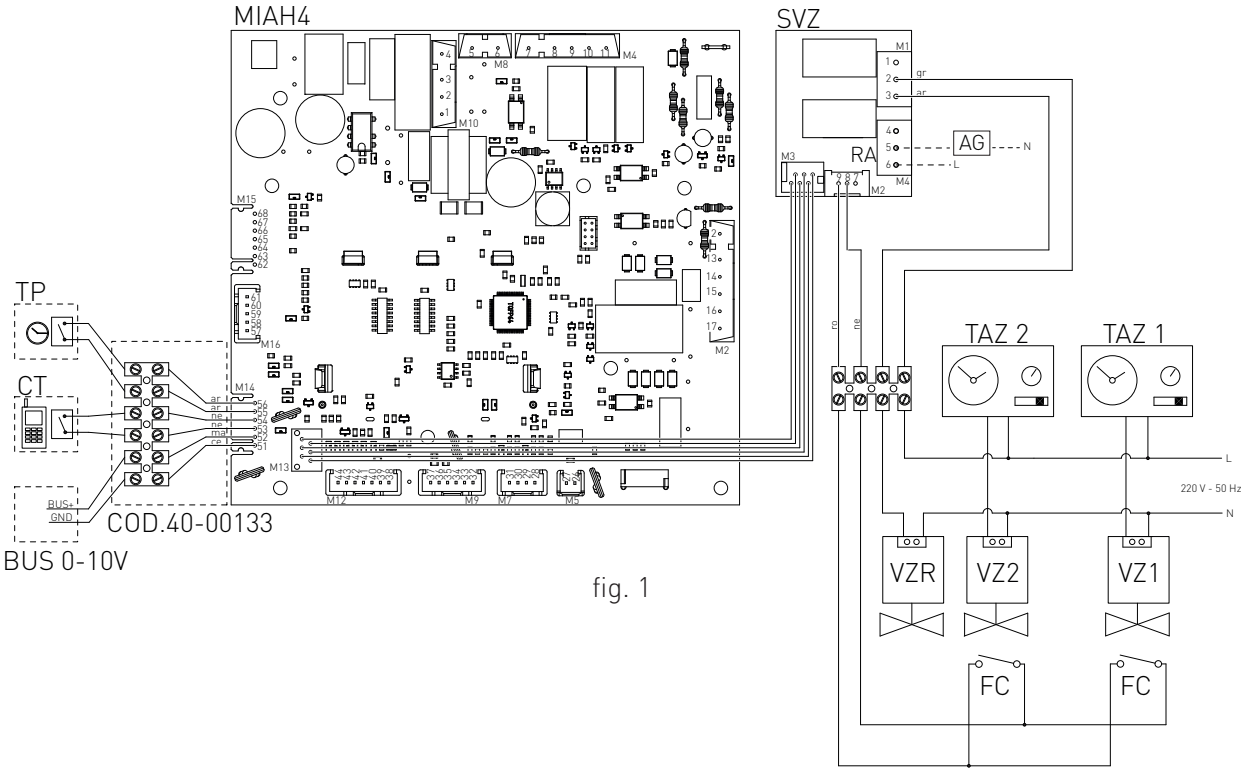

fig. 1

RA: AUXILIARY RELAY

TAZ1:	ROOM THERMOSTAT ZONE 1
TAZ 2:	ROOM THERMOSTAT ZONE 2
VZ1:	ZONE 1 VALVE
VZ2:	ZONE 2 VALVE
VZR:	REMOTE CONTROLLED ZONE VALVE
FC:	ZONE VALVES LIMIT SWITCH
GR:	GREY
AR:	ORANGE
NE:	BLACK
MA:	BROWN
CE:	LIGHT BLUE
RO:	RED

REMOTE BOILER SYSTEM - BOILER PROBE AND DIVERTER VALVE CONNECTION

- clamp M9 - boiler probe: insert the boiler probe cable inside the panel inserting the terminals 35 and 34. It is not necessary to follow an order of wires.

- clamp M4 - diverter valve: connect the motor cable of the diverter valve by means of the molex clamp. Insert the cable inside the tool panel and connect the terminals of the cable to the clamp M4 paying attention to the combinations: blue – clamp no. 9; brown – clamp no. 8; black – clamp no. 10.

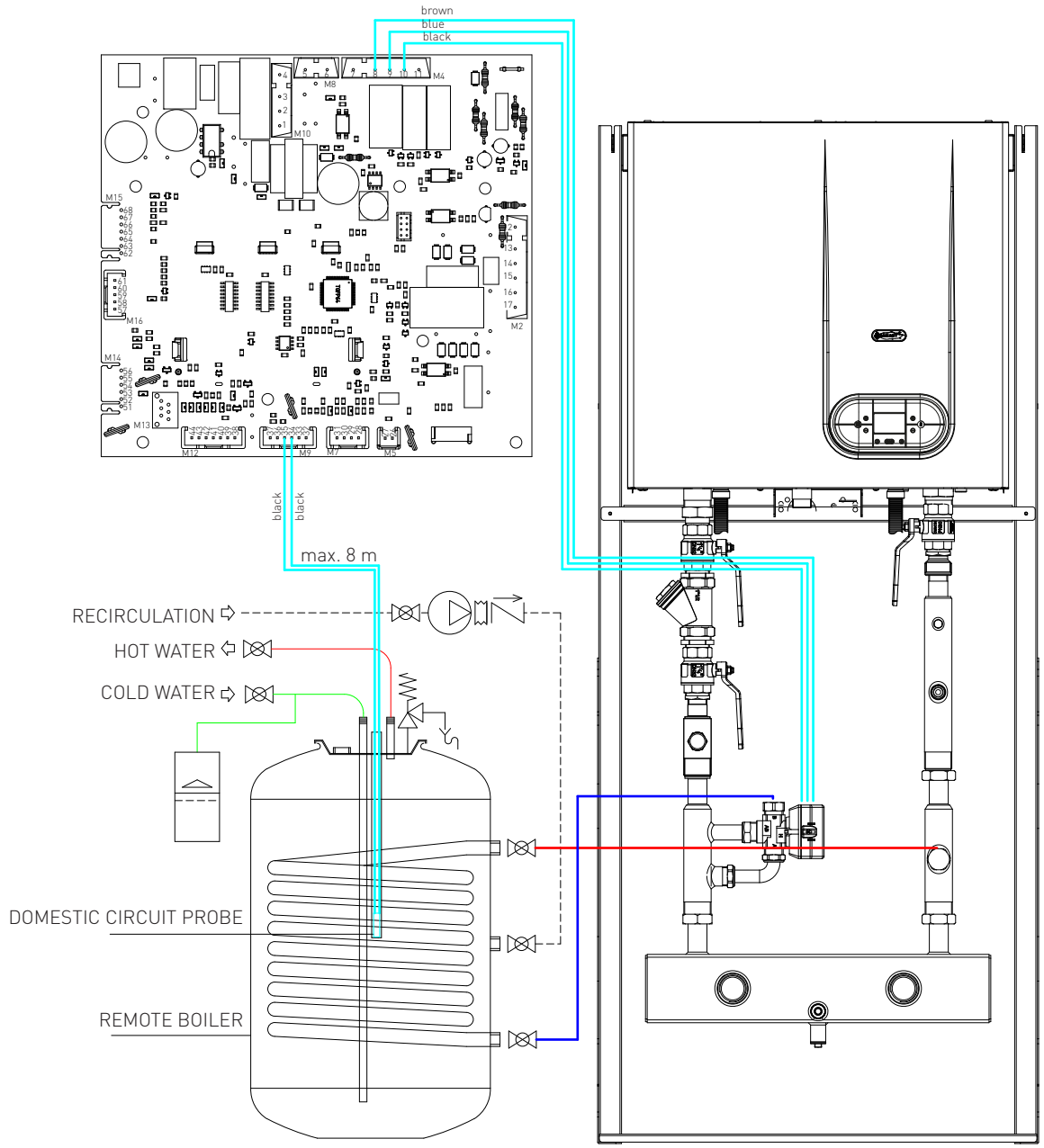

fig. 1

D.H.W. EXCHANGER SYSTEM CONNECTION

- clamp M9 - boiler probe: insert the boiler probe cable inside the panel inserting the terminals 35 and 34. It is not necessary to follow an order of wires.

- clamp M4 - diverter valve: connect the motor cable of the diverter valve by means of the molex clamp. Insert the cable inside the tool panel and connect the terminals of the cable to the clamp M4 paying attention to the combinations: blue – clamp no. 9; brown – clamp no. 8; black – clamp no. 10.

- clamp M13 - activation by external flow-meter: insert the cable inside the control panel and connect the cable terminal to clamp M13.

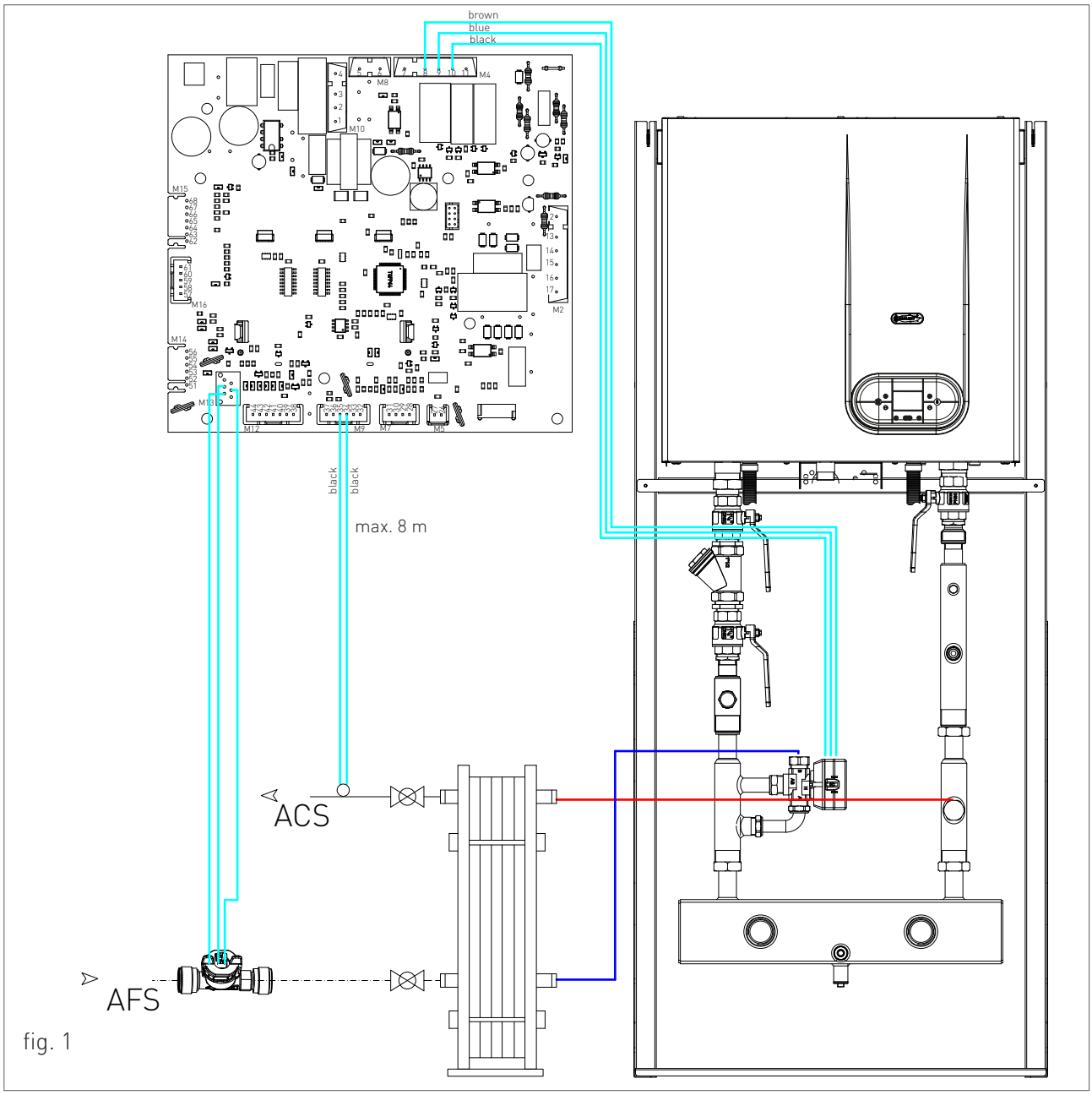

fig. 1

1.1.22. FUME EXHAUST FITTINGS

WARNING

In order to ensure proper operation and efficiency of the device you have to connect the boiler fume exhaust fitting to the fume exhaust duct using appropriate polypropylene flue fittings for condensing boilers. It is recommended to install discharge systems approved by Aleabrax Systems.

› For all discharge ducts, with regard to the fumes path, you should provide an uphill slope (outwards) so as to favour the reflux of the condensate towards the combustion chamber, suitably realized to collect and drain acid condensate.

› In order to discharge the fumes through a fumes exhaust duct carefully follow the technical standards in force.

› Suction and discharge systems, tailored to individual installations, must be protected with accessories that prevent the ingress of foreign objects and atmospheric agents.

INSTALLATION REQUIREMENTS

For Australia – refer to AS/NZS 5601 and local authority for minimum clearances as illustrated below:

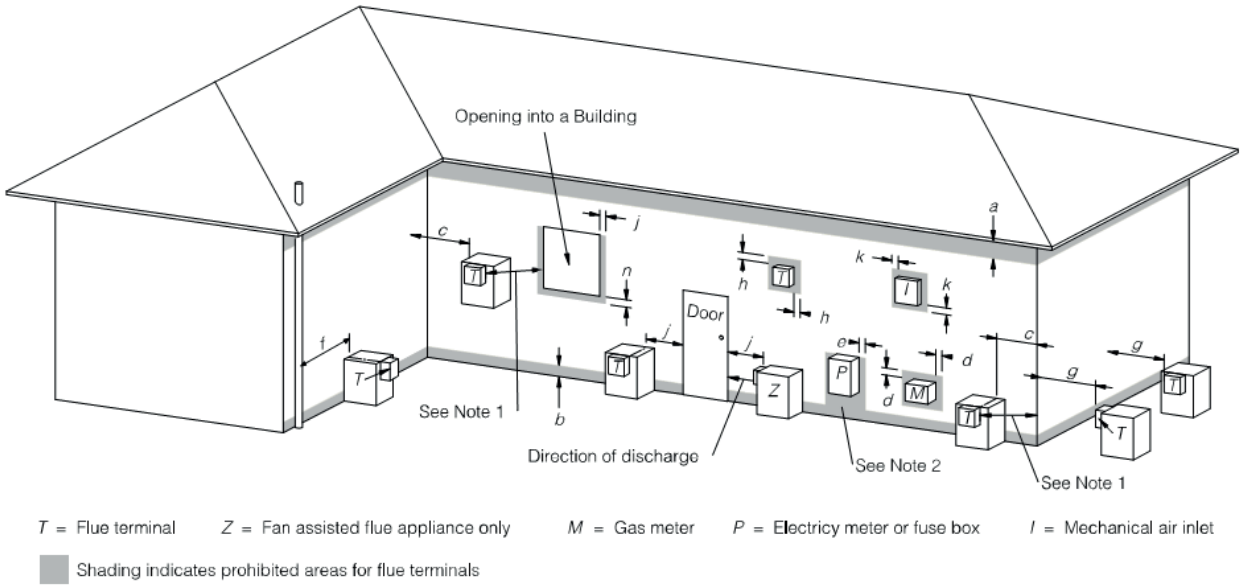

MINIMUM CLEARANCES REQUIRED FOR *BALANCED LUE* TERMINALS, FAN-ASSISTED *FLUE TERMINALS*, ROOM–SEALED APPLIANCE TERMINALS OR THE TERMINALS OF OUTDOOR APPLIANCES

1.1.23. TYPES OF FUME EXHAUST SYSTEMS

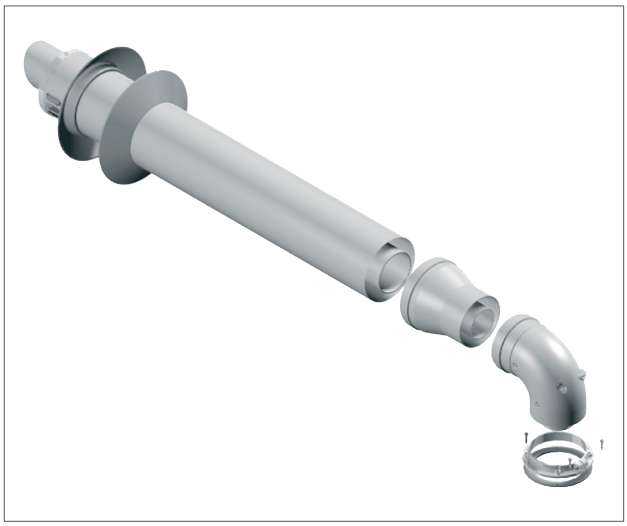

KIT AK 50 - HORIZONTAL CO-AXIAL SYSTEM Ø80/125 INTERNAL POLYPROPYLENE DUCT ADJUSTABLE AT 360°.

It allows fumes discharge and air intake from external wall.

Suitable only for condensing boilers.

It allows fuel gas discharge and air intake for combustion through co-axial ducts, the external one for air intake, the plastic internal one for fumes discharge.

PLEASE SEE THE MAXIMUM DISCHARGE LENGTH IN THE TABLE IN CHAPTER "TECHNICAL DATA".

The maximum discharge length (or linear reference length) can be calculated summing the length of the linear tube and that equivalent to each additional curve with respect to the first.

Subsequent addition of a curve is similar to adding a linear length of tube according to the indications below:

co-axial curve Ø80/125 at 90° = 1.6 m

co-axial curve Ø80/125 at 45° = 0.9 m

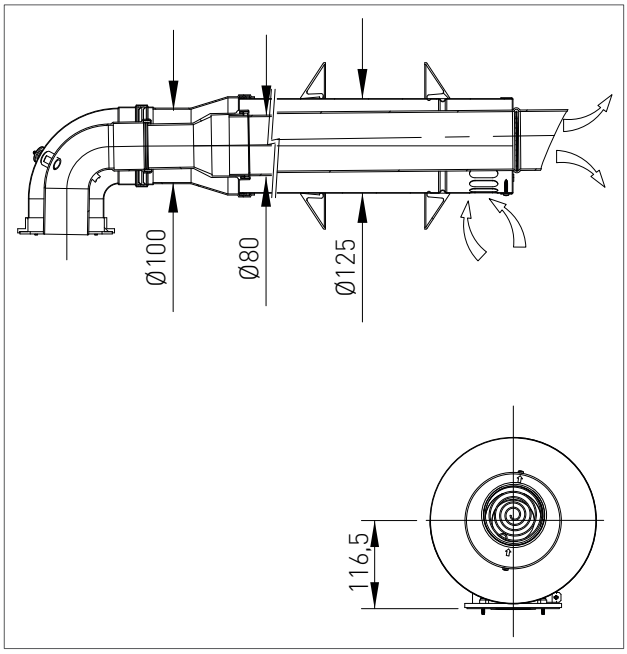

KIT CK 50 - VERTICAL CO-AXIAL SYSTEM Ø80/125 INTERNAL POLYPROPYLENE DUCT.

It allows fumes discharge and air intake directly from roof.

Suitable only for condensing boilers.

It allows fuel gas discharge and air intake for combustion through co-axial ducts, the external one for air intake, the plastic internal one for fumes discharge.

PLEASE SEE THE MAXIMUM DISCHARGE LENGTH IN THE TABLE IN CHAPTER "TECHNICAL DATA".

The maximum discharge length (or linear reference length) can be calculated summing the length of the linear tube and that equivalent to each additional curve with respect to the first.

Subsequent addition of a curve is similar to adding a linear length of tube according to the indications below:

co-axial curve Ø80/125 at 90° = 1.6 m

co-axial curve Ø80/125 at 45° = 0.9 m

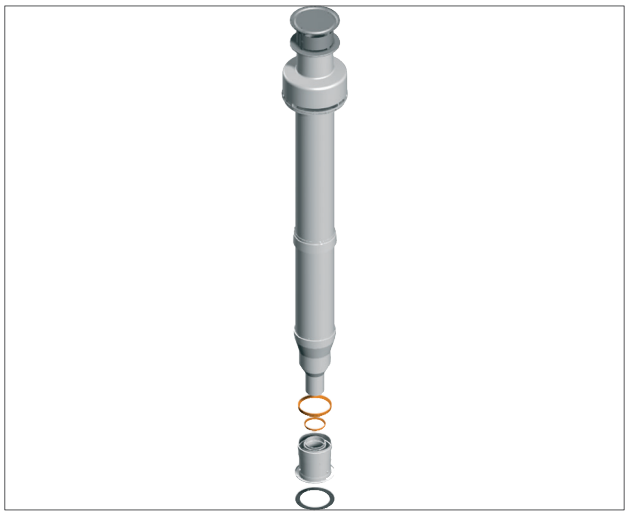

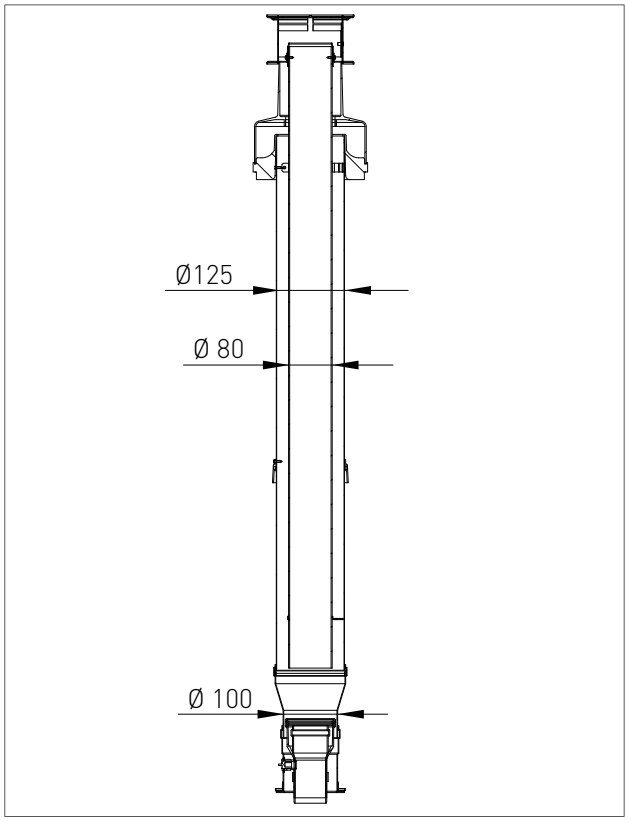

KIT EK 50 - SPLIT SYSTEM Ø80 MADE OF POLYPROPYLENE

The two tubes system allows fumes discharge through the fumes exhaust duct and air intake from the environment.

Suitable only for condensing boilers.

It allows discharging fuel gas and air suctioning for combustion through two separated ducts.

PLEASE SEE THE MAXIMUM DISCHARGE AND INTAKE LENGTH IN THE TABLE IN CHAPTER "TECHNICAL DATA".

The maximum discharge and intake length (or linear reference length) can be calculated summing the length of the linear tube and that equivalent to each additional curve with respect to the first.

Subsequent addition of a curve is similar to adding a linear length of tube according to the indications below:

curve Ø80 at 90°= 3 m

curve Ø80 at 45°= 1.4 m

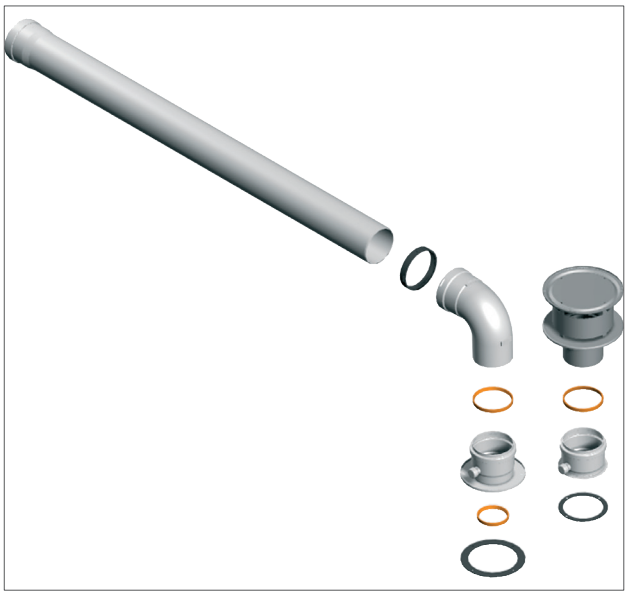

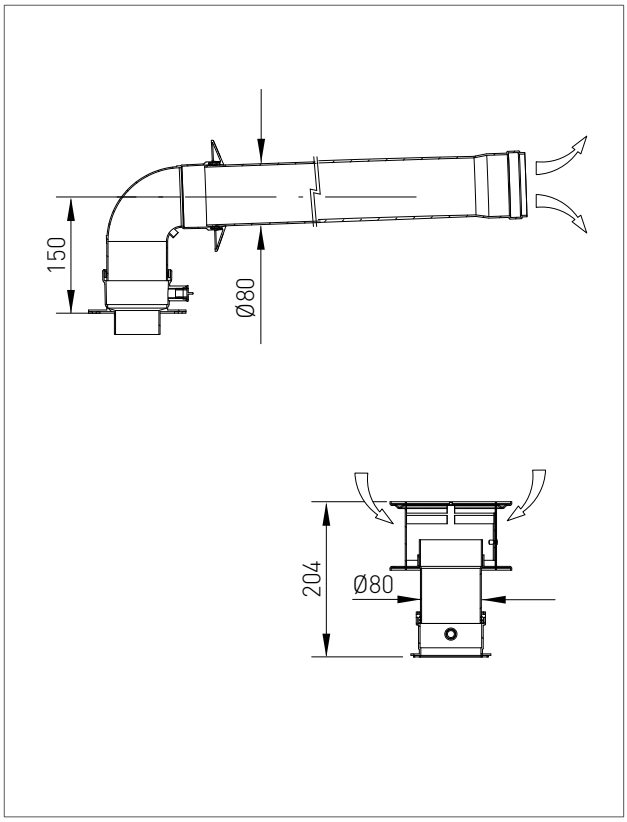

KIT FK 50 - SPLIT SYSTEM Ø80 MADE OF POLYPROPYLENE

The two tubes system allows fumes discharge through the roof and air intake from the environment.

Suitable only for condensing boilers.

It allows discharging fuel gas and air suctioning for combustion through two separated ducts.

PLEASE SEE THE MAXIMUM DISCHARGE AND INTAKE LENGTH IN THE TABLE IN CHAPTER "TECHNICAL DATA".

The maximum discharge and intake length (or linear reference length) can be calculated summing the length of the linear tube and that equivalent to each additional curve with respect to the first.

Subsequent addition of a curve is similar to adding a linear length of tube according to the indications below:

curve Ø80 at 90°= 3 m

curve Ø80 at 45°= 1.4 m

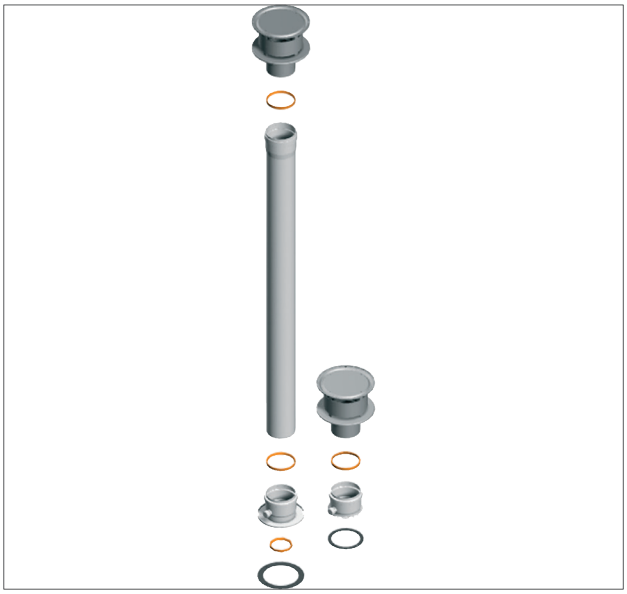

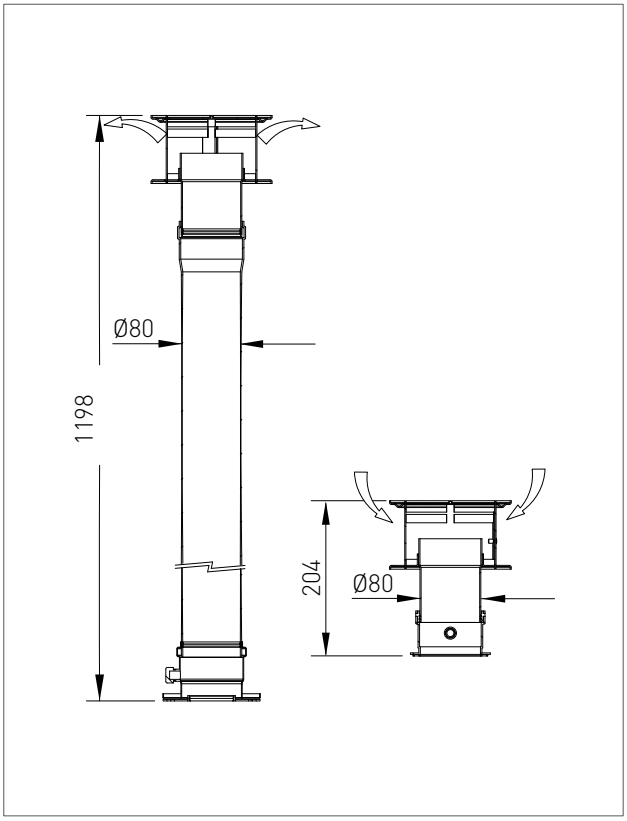

FLUE MANIFOLD Ø100 KIT IN POLYPROPYLENE

It allows fumes discharge in chimney and draws air from atmosphere.

Suitable only for condensing boilers.

PLEASE SEE THE MAXIMUM DISCHARGE AND INTAKE LENGTH IN THE TABLE IN CHAPTER "TECHNICAL DATA".

The maximum discharge and intake length (or linear reference length) can be calculated summing the length of the linear tube and that equivalent to each additional curve with respect to the first.

Subsequent addition of a curve is similar to adding a linear length of tube according to the indications below:

curve Ø100 at 90°= 1.5 m

curve Ø100 at 45°= 0.8 m

NB: The air intake manifold is also available (optional - fig. 3).

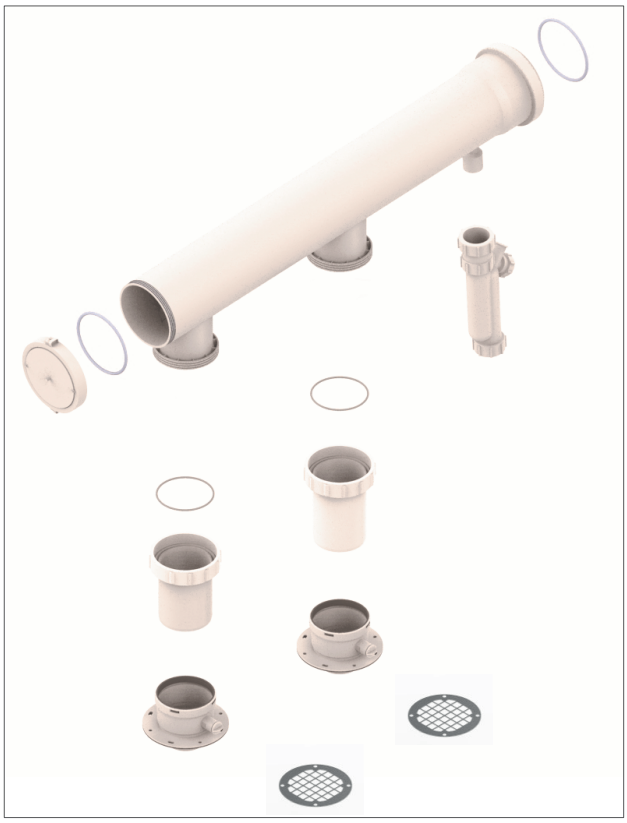

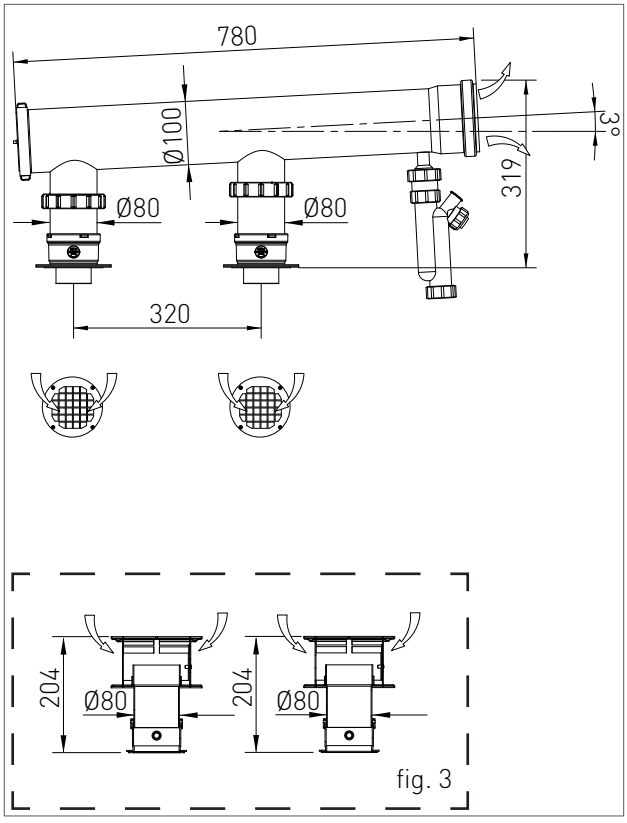

fig. 3

2. SUPPORT CENTRE SECTION

All operations described below relative to first start-up, maintenance and replacement should be performed only by qualified personnel and authorized by Aleabrax Systems.

2.1. FIRST START-UP

2.1.1. PRELIMINARY OPERATIONS FOR FIRST START-UP

The first start-up operations consist in checking the correct installation, adjustment and operation of the device. Proceed as follows:

- check the inner system sealing in accordance with the indications provided by standard and regulations in forced;
- check if the gas used is suitable for the boiler;
- check if the gas capacity and relative pressures comply with those on the plate;
- check the intervention of the safety device in case of lack of gas;
- make sure that the device supply voltage corresponds with that on the plate (230 V – 50 Hz) and that the wiring is correct;
- make sure that the grounding system works properly;
- make sure that the combustion air adduction and fumes and condensate discharge take place properly in compliance with the Local and National Laws and Standards in force;
- make sure that the fumes discharge tube and its connection to the fume exhaust duct comply with the requirements of the Local and National Laws and Standards;
- make sure that the heating system gate valves are open;
- make sure that there is no intake of gaseous products within the system;
- make sure that there are no flammable liquids or materials near the device;
- open the boiler gas tap and make sure that there are no gas leaks upstream from the device (the burner gas connection must be checked while the machine is running);
- in case of new installation of the gas supply network, the air inside the tubes may block the device at its first start-up. You might have to repeat the start-up procedure to purge all the air inside the tube.

2.1.2. BOILER COMMISSIONING

WARNING

Make sure that the system is correctly filled.

Proceed with boiler commissioning as follows:

› check that the gas tap is closed;

› power the boiler;

› make sure the circulator is not blocked;

› if it is blocked, wait that the circulator performs the automatic unlocking function (3 minute duration);

› if the circulator appears to be still blocked, reactivate the automatic unlocking function of the circulator (additional 3 minutes) by shutting off the power supply and then restoring it.

› After completing the above mentioned operations, open the gas tap.

› Use the button '' to select the desired operation mode. If the symbol is displayed fixed, it means that the function was activated.

› the burner will start as soon as the thermostat contact is closed;

› if the flame is missing the board will repeat the start-up operations after post-ventilation (20 seconds).

› You might have to repeat the start-up operation several times to release all air inside the gas tube. Before repeating the operation, wait at least 5 seconds from the last start-up attempt and unlock the boiler from "E01" error code by pressing the Reset '' key.

2.1.3. CO2 VALUE CHECK AND CALIBRATION

WARNING

The CO_2 value should be checked with the casing assembled, while the gas valve should be adjusted with the casing open.

To check and calibrate the CO2 value to minimum and maximum heating power proceed as follows for every single unit:

FOR MINIMUM HEATING POWER

› Activate the chimney sweep function (F07) by holding for 7 seconds the key 'R' (the maximum time of the function is 15 minutes).

› Insert the fumes analyser probe in the suitable 'PF' fumes inlet (fig. 1), then make sure that the CO_2 value complies with the indications in "Technical data", otherwise unscrew the protection screw 'A' (fig. 2) and adjust using a 4 Allen wrench the screw '2' (fig. 2) of the Off-Set adjuster. To increase the CO_2 value, turn the screw clockwise and vice-versa if you want to decrease it. Once completed the adjustment, tighten the protection screw 'A' (fig. 2) on the Off-Set adjuster.

FOR MAXIMUM HEATING POWER

› Press the key '⊕' of the heating in order to calibrate the maximum heating power.

› Make sure that the CO_2 value complies with the requirements indicated in chapter "Technical data", otherwise adjust using screw '1' (fig. 2) of the gas flow adjuster. To increase the CO_2 value, turn the screw anti-clockwise and vice-versa if you want to decrease it.

› After each adjustment variation on screw '1' (fig. 2) of the gas flow adjuster you have to wait for the boiler to stabilize itself to the set value (about 30 seconds).

› Then press the key '⊖' of the heating and make sure that the CO_2 value did not change to minimum, if changed repeat the calibration described in the previous paragraph.

› Deactivate the chimney sweep function by switching the boiler to the 'OFF' operating mode using the button '⏻'.

fig. 1

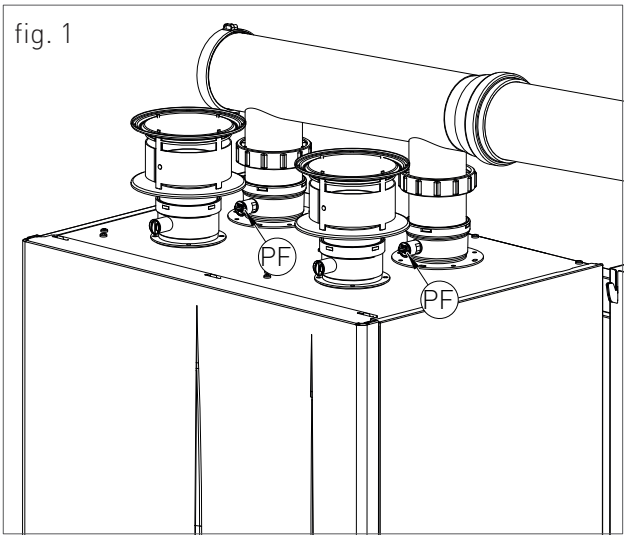

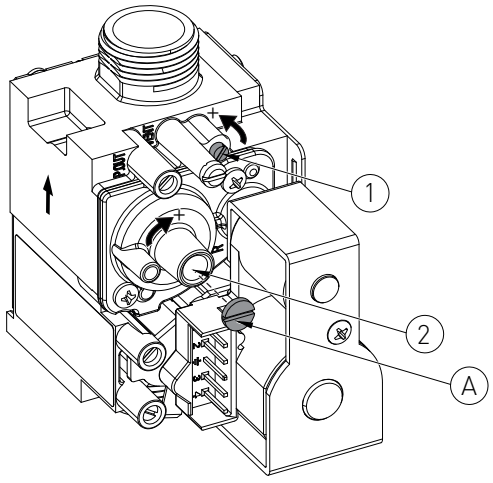

fig. 2

2.1.4. ACCESSING AND PROGRAMMING THE PARAMETERS

All the values of the parameters can be changed from the master control panel '1' (see figure), except for the parameters with which it is possible to set the power of a single unit (P00, P10, P11, P12, P13 and P14); in this case, act also from the slave control panel '2' (see figure).

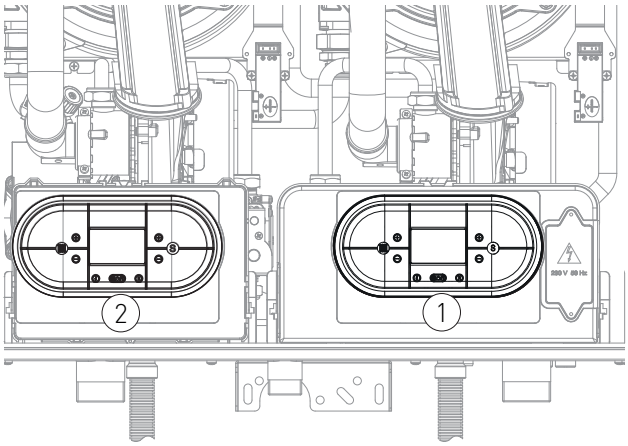

To access the parameters menu and adjust their values, follow the procedure below:

1. Press the button ' ' to select the OFF mode displayed using the symbol ' '.

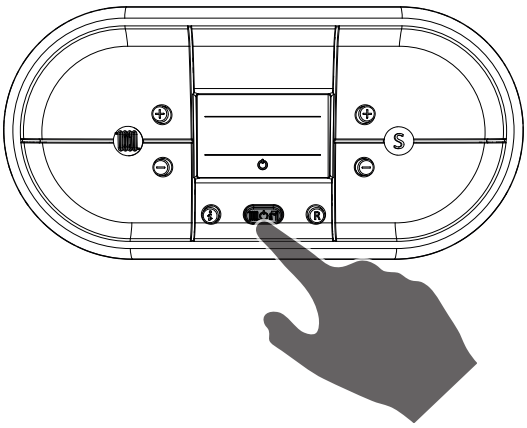

2. Hold at the same time the keys '(i)' and 'R' until on the display appears the symbol '' with the message 'P00', and release the keys '(i)' and 'R'.

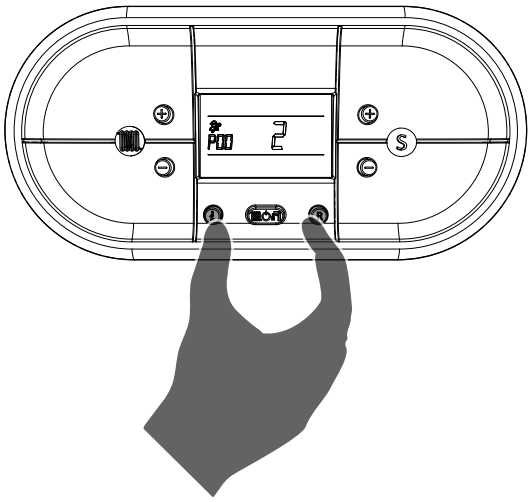

3. Use the keys '⊕' and '⊖' of the heating circuit to select the parameter to be edited.

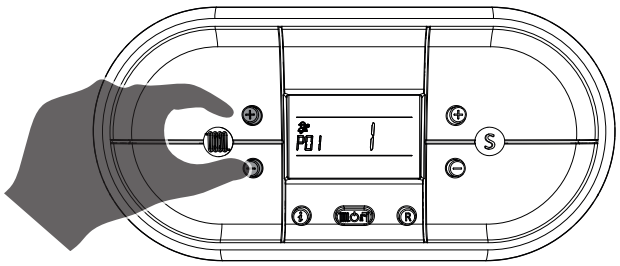

4. Use the keys '⊕' and '⊖' of the 'S' (S) symbol to change the value of the parameter.

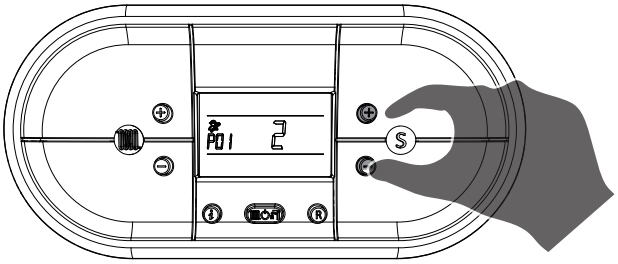

5. Press the key '⏻' to confirm the action and wait for the display to stop blinking, indication of the fact that the adjustment was implemented.

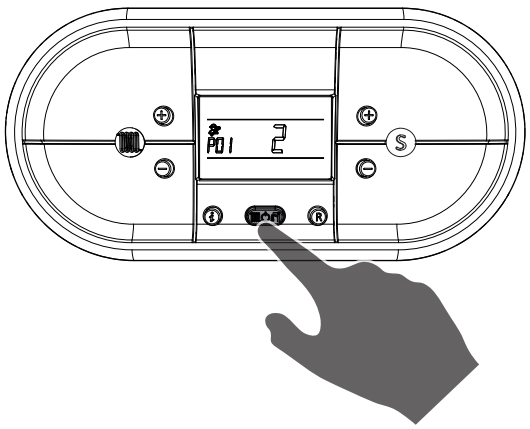

6. To exit the parameters menu, hold at the same time the keys 'ⓘ' and 'Ⓡ' and wait for the symbol '⏻' to appear on the display.

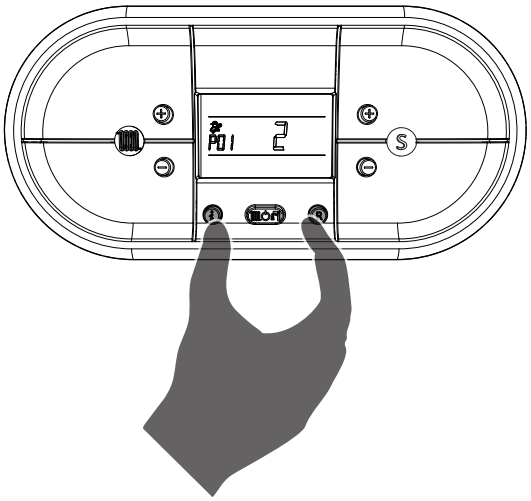

7. In order for the modifications performed by the master control panel be set even on the slave board, switch off and on the power to the boiler. Wait the necessary time for the operation, about 30 seconds, until the symbol '⏻' no longer appears on the display.

2.1.5. DIGITECH CS PARAMETERS TABLE (MIAH412)

PARAMETER	DESCRIPTION	RANGE	FUNCTION
P00	***BOILER MODEL SELECTION*** (CHANGE THE PARAMETER VALUE ON BOTH CONTROL PANELS, MASTER AND SLAVE, PLEASE SEE CHAPTER "PARAMETER ACCESS AND PROGRAMMING").	0 - 3	0 = N.A. 1 = N.A. 2 = N.A. 3 = A1K 50 (FOR A1K 100 SET THE VALUE ON BOTH UNITS)
P01	***BOILER TYPE SELECTION***	0 - 1	0 = WITH REMOTE BOILER SUPPLY SYSTEM (PRE-SET BY DEFAULT, WITH DHW CIRCUIT MANAGED BY MODBUS) TO CHANGE THE DHW OPERATING MODE, CHANGE THE VALUE OF THE PARAMETER P32. 1 = HEATING ONLY 2 = INSTANTANEOUS (THIS OPERATING MODE REQUIRES THE INSTALLATION OF THE KIT CODE 65-00819, AS DESCRIBED IN CHAPTERS 'MECHANICAL SYSTEM DIAGRAM' AND 'OPTIONAL ELECTRICAL CONNECTIONS'. MOREOVER, AFTER INSTALLING THE KIT, SET PARAMETER P32 TO '0').
P02	***GAS TYPE SELECTION*** ATTENTION: READ THE INSTRUCTION IN CHAPTER 'GAS TRANSFORMATION' BEFORE CHANGING THIS PARAMETER.	0 - 1	0 = METHANE 1 = GPL

PARAMETER	DESCRIPTION	RANGE	FUNCTION
P03	***SETTING THE HEATING TEMPERATURE*** IN CASE OF DIRECT SUPPLY, BY A BOILER, OF A LOW TEMPERATURE SYSTEM, INSTALL A SECURITY THERMOSTAT ON THE DELIVERY WHICH INTERRUPTS THE OPERATION OF THE BOILER IN CASE OF HIGH DELIVERY TEMPERATURE. THE COMPANY IS NOT HELD LIABLE FOR RESULTING DAMAGES TO PERSONS OR THINGS DUE TO THE NON-OBSERVANCE OF SUCH INDICATION.	0 - 1	0 = STANDARD (30-80 °C) (SET BY DEFAULT) 1 = REDUCED (25-45 °C) FOR FLOOR SYSTEMS
P04	***HEATING RUN-UP*** THROUGH THIS PARAMETER YOU CAN SET THE TIME, DURING START-UP PHASE, NECESSARY FOR THE BOILER TO REACH THE MAXIMUM SET POWER (IN HEATING).	0 - 5	0 = (DISABLED) 1 = 50 SECONDS 2 = 100 SECONDS 3 = 200 SECONDS (SET BY DEFAULT) 4 = 400 SECONDS 5 = 600 SECONDS
P05	***TIME DURING THE PRIMARY START-UP OF A SINGLE UNIT*** BY MEANS OF THIS PARAMETER, IT IS POSSIBLE TO SET THE TIME DURING WHICH A SINGLE UNIT BECOMES PRIMARY DURING THE START-UP, AFTER WHICH THE AUTOMATIC REVERSAL WITH THE OTHER UNIT OCCURS.	0 - 255	THE VALUE IS EXPRESSED IN HOURS (PRE-SET TO 50 HOURS)
P06	***TURN OFF OF A SINGLE UNIT***	1 - 3	1 = START ONLY MASTER 2 = START ONLY SLAVE 3 = BOTH TURNED ON
P07	***HEATING TIMING*** THROUGH THIS PARAMETER YOU CAN SET THE MINIMUM TIME FOR WHICH THE BURNER WILL BE TURNED OFF ONCE THE HEATING TEMPERATURE REACHED THE USER SET TEMPERATURE.	0 - 90	VALUE EXPRESSED IN MULTIPLES OF 5 SECONDS (PRE-SET AT 36 X 5 = 180 SECONDS)
P08	***POST-CIRCULATION HEATING TIMING*** THROUGH THIS PARAMETER YOU CAN SET THE PUMP DURATION OF OPERATION DURING HEATING CYCLE, AFTER THE MAIN BURNER TURNS OFF DUE TO THE ENVIRONMENT THERMOSTAT.	0 - 90	VALUE EXPRESSED IN MULTIPLES OF 5 SECONDS (PRE-SET AT 36 X 5 = 180 SECONDS)

PARAMETER	DESCRIPTION	RANGE	FUNCTION
P09	***POST-CIRCULATION DOMESTIC / BOILER TIMING*** (ONLY FOR THE VERSION WITH REMOTE BOILER SUPPLY SYSTEM). THROUGH THIS PARAMETER YOU CAN SET THE PUMP OPERATION DURATION ON THE DOMESTIC CIRCUIT, AFTER THE TAP IS CLOSED.	0 - 90	VALUE EXPRESSED IN MULTIPLES OF 5 SECONDS (PRE-SET AT 18 X 5 = 90 SECONDS)
P10	***FAN MINIMUM SPEED ADJUSTMENT*** THROUGH THIS PARAMETER YOU CAN SET THE FAN MINIMUM SPEED THAT CORRESPONDS TO THE MINIMUM POWER OF THE BURNER. THE VALUE IS PRE-SET BASED ON THE SET POWER (SEE PARAMETER P00) AND ON THE GAS TYPE (SEE PARAMETER P02). (CHANGE THE PARAMETER VALUE ON BOTH CONTROL PANELS, MASTER AND SLAVE, PLEASE SEE CHAPTER "PARAMETER ACCESS AND PROGRAMMING").	38 - VALUE SET FOR PARAMETER P11	THE VALUE IS EXPRESSED IN HERTZ (1HZ = 30 RPM)
P11	***FAN MAXIMUM SPEED ADJUSTMENT*** THROUGH THIS PARAMETER YOU CAN SET THE FAN MAXIMUM SPEED THAT CORRESPONDS TO THE MAXIMUM POWER OF THE BURNER. THE VALUE IS PRE-SET BASED ON THE SET POWER (SEE PARAMETER P00) AND ON THE GAS TYPE (SEE PARAMETER P02). (CHANGE THE PARAMETER VALUE ON BOTH CONTROL PANELS, MASTER AND SLAVE, PLEASE SEE CHAPTER "PARAMETER ACCESS AND PROGRAMMING").	VALUE SET FOR PARAMETER P10 - 290	THE VALUE IS EXPRESSED IN HERTZ (1HZ = 30 RPM)
P12	***HEATING FAN MINIMUM SPEED ADJUSTMENT*** THROUGH THIS PARAMETER YOU CAN SET THE FAN MINIMUM SPEED IN HEATING PHASE, THAT CORRESPONDS TO THE MINIMUM BURNER POWER DURING A REQUEST TO OPERATE IN HEATING MODE. [SEE CHAPTER 'HEAT CAPACITY DIAGRAM (KW) – ELECTRIC FAN FREQUENCY (HZ)']. THE VALUE IS PRE-SET BASED ON THE SET POWER (SEE PARAMETER P00) AND ON THE GAS TYPE (SEE PARAMETER P02). (CHANGE THE PARAMETER VALUE ON BOTH CONTROL PANELS, MASTER AND SLAVE, PLEASE SEE CHAPTER "PARAMETER ACCESS AND PROGRAMMING").	38 - VALUE SET FOR PARAMETER P13	THE VALUE IS EXPRESSED IN HERTZ (1HZ = 30 RPM)

PARAMETER	DESCRIPTION	RANGE	FUNCTION
P13	***HEATING FAN MAXIMUM SPEED ADJUSTMENT*** THROUGH THIS PARAMETER YOU CAN SET THE FAN MAXIMUM SPEED IN HEATING PHASE, THAT CORRESPONDS TO THE MAXIMUM BURNER POWER DURING A REQUEST TO OPERATE IN HEATING MODE (SEE CHAPTER 'HEAT CAPACITY DIAGRAM (KW) –ELECTRIC FAN FREQUENCY (HZ)'). THE VALUE IS PRE-SET BASED ON THE SET POWER (SEE PARAMETER P00) AND ON THE GAS TYPE (SEE PARAMETER P02). (CHANGE THE PARAMETER VALUE ON BOTH CONTROL PANELS, MASTER AND SLAVE, PLEASE SEE CHAPTER "PARAMETER ACCESS AND PROGRAMMING").	VALUE SET FOR PARAMETER P12 - 290	THE VALUE IS EXPRESSED IN HERTZ (1HZ = 30 RPM)
P14	***STARTING STEP ADJUSTMENT*** THROUGH THIS PARAMETER YOU CAN SET THE FAN SPEED DURING START-UP THE VALUE IS PRE-SET BASED ON THE SET POWER (SEE PARAMETER P00) AND ON THE GAS TYPE (SEE PARAMETER P02). (CHANGE THE PARAMETER VALUE ON BOTH CONTROL PANELS, MASTER AND SLAVE, PLEASE SEE CHAPTER "PARAMETER ACCESS AND PROGRAMMING").	VALUE SET FOR PARAMETER P10 - 255	THE VALUE IS EXPRESSED IN HERTZ (1HZ = 30 RPM)
P15	***ANTI-LEGIONELLA FUNCTION*** (ONLY FOR THE VERSION WITH REMOTE BOILER SUPPLY SYSTEM). THROUGH THIS PARAMETER YOU CAN ACTIVATE/DEACTIVATE "ANTI LEGIONELLA" HEAT TREATMENT OF THE ACCUMULATION BOILER. EVERY 7 DAYS THE WATER TEMPERATURE INSIDE THE ACCUMULATION BOILER IS HEATED BEYOND 60 °C THUS GENERATING A BURNING HAZARD. KEEP UNDER CONTROL SUCH DOMESTIC HOT WATER TREATMENT (AND INFORM THE USERS) TO AVOID UNFORESEEABLE DAMAGES TO PERSONS, ANIMALS, PROPERTY. A THERMOSTATIC VALVE SHOULD BE INSTALLED AT THE DOMESTIC HOT WATER OUTLET TO AVOID ANY BURNS.	0 - 1	0 = DISABLED 1 = ENABLED (PRE-SET BY DEFAULT)

PARAMETER	DESCRIPTION	RANGE	FUNCTION
P16	***CLIMATE COMPENSATION CURVE*** (ONLY WITH EXTERNAL PROBE CONNECTED) YOU CAN CONNECT AN EXTERNAL TEMPERATURE PROBE (SEE CHAPTER 'ELECTRICAL CONNECTIONS') THAT AUTOMATICALLY CHANGES THE DELIVERY TEMPERATURE BASED ON THE EXTERNAL MEASURED TEMPERATURE. THE NATURE OF THE CORRECTION DEPENDS ON THE THERMO-ADJUSTMENT VALUE KD SET (SEE CHART). THE SELECTION OF THE CURVE IS DETERMINED BY THE MAXIMUM DELIVERY TEMPERATURE TM AND THE MINIMUM EXTERNAL TEMPERATURE TE TAKING INTO ACCOUNT THE HOUSE INSULATION DEGREE. THE VALUES OF THE DELIVERY TEMPERATURES TM, REFER TO STANDARD SYSTEMS 30-80 °C OR FLOOR SYSTEMS 25-45 °C. THE SYSTEM TYPE CAN BE SET FROM PARAMETER P03.	0 - 30	(SET BY DEFAULT AT 25) THE NUMBERING OF THE VALUE CORRESPONDS TO 'KD' CURVES ON THE CHART (SEE CHART BELOW).

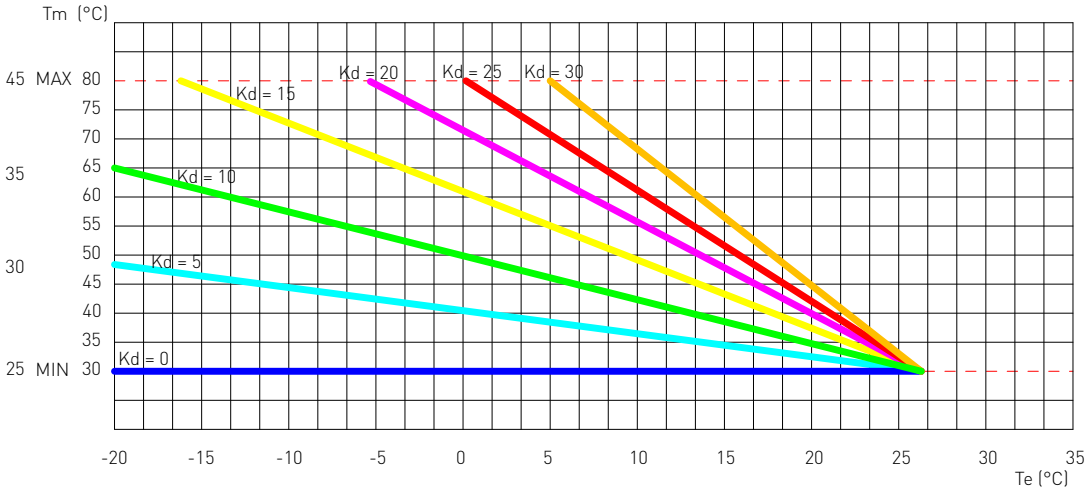

P17	***BOILER LOADING SETPOINT DIFFERENTIAL*** (ONLY FOR THE VERSION WITH REMOTE BOILER SUPPLY SYSTEM). BY MEANS OF THIS PARAMETER, IT IS POSSIBLE TO SET THE PREVIOUS START VALUE FOR THE BOILER ACCORDING TO THE SETPOINT OF THE DOMESTIC CIRCUIT SET BY THE USER.	3 - 15	VALUE EXPRESSED IN °C (PRE-SET TO 5°C)

PARAMETER	DESCRIPTION	RANGE	FUNCTION
P18	***ENABLING BUS INDUSTRIAL PILOTING 0 -10V*** THROUGH THIS PARAMETER YOU CAN ENABLE OR DISABLE THE BUS INDUSTRIAL INPUT 0-10 V TO SET THROUGH EXTERNAL BUS THE BURNER POWER OR THE DELIVERY TEMPERATURE.	0 - 2	0 = DISABLED (SET BY DEFAULT) 1 = TEMPERATURE CONTROL MODE 2 = POWER CONTROL MODE
P19	***MINIMUM HEATING SETPOINT*** THROUGH THIS PARAMETER YOU CAN SET THE USER-ADJUSTABLE MINIMUM HEATING TEMPERATURE.	20 - 40	THE VALUE IS EXPRESSED IN °C
P20	***MAXIMUM HEATING SETPOINT*** THROUGH THIS PARAMETER YOU CAN SET THE USER-ADJUSTABLE MAXIMUM HEATING TEMPERATURE.	40 - 90	THE VALUE IS EXPRESSED IN °C
P21	***MAXIMUM DOMESTIC SETPOINT*** (only for RS version with remote boiler system) THROUGH THIS PARAMETER YOU CAN SET THE USER-ADJUSTABLE MAXIMUM DOMESTIC TEMPERATURE.	45 - 75	THE VALUE IS EXPRESSED IN °C
P22	***SET POINT ΔT DELIVERY-RETURN*** THROUGH THIS PARAMETER YOU CAN SET THE TEMPERATURE DIFFERENCE BETWEEN DELIVERY AND RETURN.	0 10 - 40	0 = DISABLED THE VALUE IS EXPRESSED IN °C
P23	***MODULATING PUMP MINIMUM SPEED*** THROUGH THIS PARAMETER YOU CAN SET THE MINIMUM SPEED VALUE OF THE MODULATING PUMP DURING A REQUEST TO OPERATE IN HEATING MODE.	50 - 70	THE VALUE IS EXPRESSED IN PERCENTAGE
P24	***MODULATING PUMP MAXIMUM SPEED*** THROUGH THIS PARAMETER YOU CAN SET THE MAXIMUM SPEED VALUE OF THE MODULATING PUMP DURING A REQUEST TO OPERATE IN HEATING MODE.	70 - 100	THE VALUE IS EXPRESSED IN PERCENTAGE
P25	***CONTROL PERIOD ΔT DELIVERY-RETURN*** THROUGH THIS PARAMETER YOU CAN SET THE RESPONSE TIME TO THE PUMP MODULATION.	20 - 100	THE VALUE IS EXPRESSED IN SECONDS
P26	***MODBUS ADDRESS*** BY MEANS OF THIS PARAMETER, IT IS POSSIBLE TO SET THE ADDRESS OF THE BOARD ON MODBUS IN ORDER TO PERFORM A CASCADE SYSTEM.	1 - 16	BOILER NUMBERING FOR MODBUS

PARAMETER	DESCRIPTION	RANGE	FUNCTION
P27	***ACTIVATION PERCENTAGE OF THE SECONDARY UNIT***	60 - 100	THE VALUE IS EXPRESSED IN PERCENTAGE (PRE-SET BY DEFAULT TO 85%)
P28	***DEACTIVATION PERCENTAGE OF THE SECONDARY UNIT***	5 - 40	THE VALUE IS EXPRESSED IN PERCENTAGE (PRE-SET BY DEFAULT TO 10 %)
P29	***ENABLING THE MASTER BOARD WITH CRAD AREA MANAGEMENT BOARD***	0 - 2	0 = DISABLED (PRE-SET BY DEFAULT) 1 = CRAD AREA BOARD CONNECTED 2 = CRAD AREA BOARD CONNECTED + REMOTE
P30	***SETTING THE TEMPERATURE MEASUREMENT UNIT*** THROUGH THIS PARAMETER, YOU CAN SELECT THE MEASUREMENT UNIT OF THE DISPLAYED TEMPERATURE: CELSIUS (°C) OR FAHRENHEIT (°F) DEGREES.	0 - 1	0 = °C 1 = °F
P31	***SELECTION OF THE COUNTRY OF DESTINATION*** BY CHANGING THIS PARAMETER, THE CONTROL PARAMETERS OF THE COMBUSTION ARE AUTOMATICALLY CONFIGURED ACCORDING TO THE VALUES PRE-SET IN THE COUNTRY OF DESTINATION OF THE PRODUCT.	0 - 1	0 = OTHER COUNTRY 1 = U.S.A. / CANADA
P32	***DOMESTIC CIRCUIT OPERATING MODE***	0 - 2	0 = DOMESTIC CIRCUIT BY MEANS OF BOILER PROBE 1 = DOMESTIC CIRCUIT BY MEANS OF THERMOSTAT 2 = DOMESTIC CIRCUIT BY MEANS OF MODBUS

PARAMETER	DESCRIPTION	RANGE	FUNCTION
P33	***MODBUS COMMUNICATION BAUD RATE*** BY MEANS OF THIS PARAMETER, IT IS POSSIBLE TO SELECT THE MODBUS COMMUNICATION BAUD RATE SUPPORTED BY THE SAME INTERFACE.	0 - 5	0 = 9600 1 = 1200 2 = 2400 3 = 4800 4 = 9600 5 = 19200
P34	***CONNECTION STATUS OF THE SOLAR AUXILIARY BOARD*** BY MEANS OF THIS PARAMETER, IT IS POSSIBLE TO ENABLE THE AUXILIARY BOARD FOR THE EXPANSION OF THE RESOURCES WHEN THE SOLAR AUXILIARY BOARD IS CONNECTED TO THE BOILER BOARD AUTOMATICALLY, THE VALUE OF THIS PARAMETER BECOMES '1', BUT IF THE SOLAR AUXILIARY BOARD IS SUCCESSIVELY DISCOUNNECTED, THE DISPLAY OF THE CONTROL PANEL OF THE BOILER WILL DISPLAY THE ERROR 'E31'. IN THIS CASE, IN ORDER TO DEACTIVATE THE ERROR 'E31', IT IS NECESSARY TO MANUALLY SET THE VALUE OF THE PARAMETER TO '0'.	0 - 1	0 = NOT INSTALLED 1 = INSTALLED
P69	***ACTIVATION OF THE AUXILIARY RELAY ON THE "SVZ" P.C.B. (SEE CHAPTER: OPTIONAL ELECTRICAL CONNECTIONS)*** THROUGH THIS PARAMETER IT IS POSSIBLE TO MANAGE THE TYPE OF FUNCTIONING OF THE AUXILIARY RELAY ON THE "SVZ" P.C.B. (CLAMP M4, PIN 5-6). WHEN THE VALUE OF THE PARAMETER IS SET TO '3', THE ENABLING OR DISABLING OF THE AUXILIARY RELAY IS GIVEN BY THE "TP" CONTACT (SEE CHAPTER: OPTIONAL ELECTRICAL CONNECTIONS). WHEN THE "TP" CONTACT IS OPEN, THE RELAY STAYS ENERGIZED (WORKING RECIRCULATION PUMP) WHILE WHEN THE "TP" CONTACT IS CLOSED, THE RELAY IS DE-ENERGIZED (NOT WORKING RECIRCULATION PUMP).	0 - 4	0 = DISABLED (SET BY DEFAULT) 1 = HEATING CIRCUIT BOOSTER PUMP 2 = D.H.W. BOOSTER PUMP 3 = RECIRCULATION PUMP 4 = REMOTE LED FOR SIGNALLING BOILER BLOCK (SEE CHAPTER: OPTIONAL ELECTRICAL CONNECTIONS)

PARAMETER	DESCRIPTION	RANGE	FUNCTION
P70	***ENABLING OF SECURITY CONTROL FOR INSUFFICIENT CIRCULATION AT EVERY IGNITION*** THROUGH THIS PARAMETER IT IS POSSIBLE TO CHECK THE CORRECT OPERATION OF THE PUMP AT EVERY IGNITION OF THE BURNER. THIS CHECK ALLOWS PROTECTING THE HEAT EXCHANGER AND OTHER PARTS FROM EXCESSIVE NON-DISSIPATED HEAT, IN CASE THE PUMP IS NOT PROPERLY OPERATING.	0 - 1	0 = DISABLED 1 = ENABLED (SET BY DEFAULT)

2.1.6. ELECTRIC FAN FREQUENCY/HEAT CAPACITY DIAGRAM*

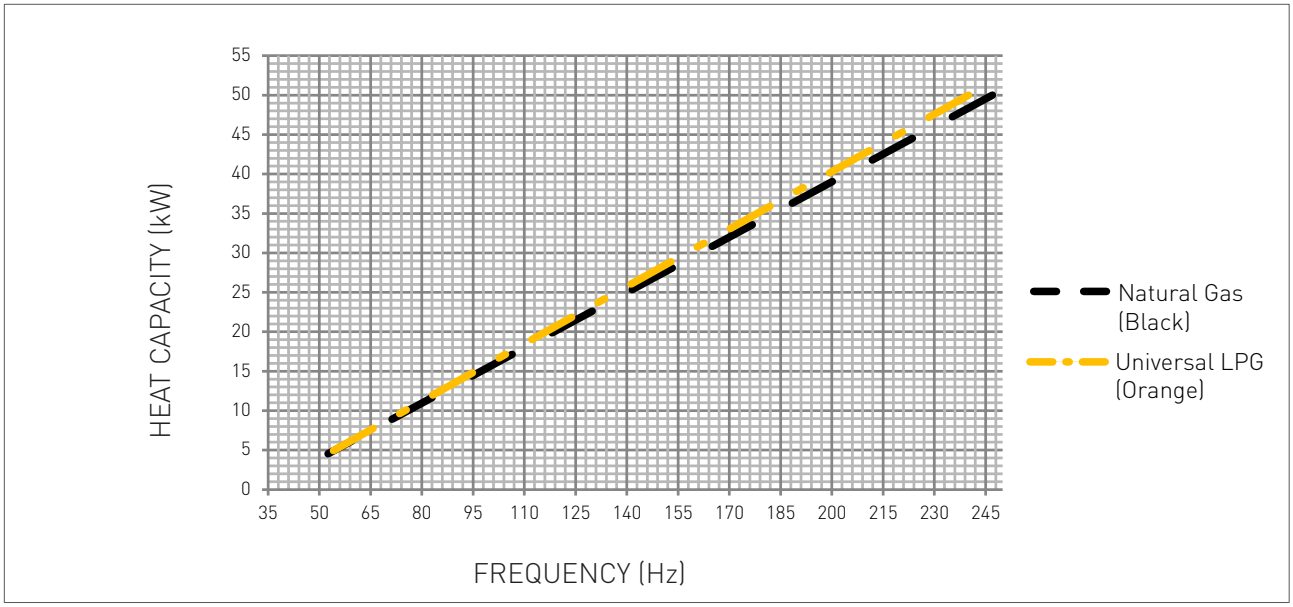

*Data on a single unit

GAS TYPE		MINIMUM FREQUENCY DURING HEATING	MAXIMUM FREQUENCY DURING HEATING	STARTING STEP ADJUSTMENT
Natural Gas (Black)	Hz	53	247	130
Universal LPG (Orange)	Hz	53	240	140

2.2. MAINTENANCE

2.2.7. GENERAL MAINTENANCE WARNINGS

DANGER

Before each components cleaning or replacement operation, ALWAYS cut off the POWER, WATER and GAS supply of the boiler.

WARNING

To ensure greater life span and proper operation of the device, during the maintenance operations use only original spare parts.

ATTENTION

To ensure the efficiency and safety of the device, the maintenance operations must be realized on an annual basis. The operations described below, are essential to the validity of the standard Aleabrax Systems warranty and must be performed by professionally qualified personnel in accordance with current legislation and authorized by Aleabrax Systems.

Please perform the following operations once a year:

- Check that the system's water PH is between 6.5 and 8.5;
- check the pre-load pressure of the expansion vessel;
- check the sealing of the water components, and replace if necessary the gaskets;
- check that the wiring is performed in compliance with the requirements in the boiler instruction manual;
- check the wiring inside the control panel;
- remove and clean the burner from oxidation;
- check the integrity and the position of the sealed chamber sealing gasket;
- check the primary exchanger, if necessary, clean it;
- check the operation of the gas light up and safety systems. If necessary, remove and clean the flame detection and light up electrodes from incrustations paying attention to respect the distances with respect to the burner;
- check the sealing of the gas components, and replace if necessary the gaskets;
- visually check the flame and the condition of the combustion chamber;
- if necessary make sure that the combustion is suitably adjusted and if required proceed as indicated in section "CO2 VALUE CHECK AND CALIBRATION";
- periodically check the integrity of the fume exhaustion system for safety and proper operation;
- make sure that the permanent ventilation outlets are present, correctly sized and functioning, based on the installed devices. Respect the requirements provided by Local and National legislation;
- check the heating circuit safety systems: limit temperature safety thermostat; limit pressure safety;
- check the proper operation of the condensate draining system, including the devices outside the boiler such as condensate collection devices installed along the path of the fume exhaust duct or neutralization devices for acid condensate. Check that the liquid flow is not obstructed and that there are no combustion gas refluxes inside the internal system.

2.2.8. TECHNICAL DATA

Model		**A1K 100**
Maximum nominal heat capacity in heating circuit	MJ/h	396
Minimum nominal heat capacity in heating circuit	MJ/h	20
Useful thermal power - 60/80°C	kW	98,37
Minimum useful thermal power - 60/80°C	kW	4,83
Useful thermal power - 30/50°C	kW	106,8
Performance at 100% Pn - 60/80°C	%	98,37
Performance at 30% Pm - return 47°C	%	102,8
Performance at 30% Pm - return 30°C	%	108,83
Performance at 100% Pn - 30/50°C	%	106,8
Maximum combustion Performance	%	97,90
Fumes temperature at nominal heat capacity	°C	66,4
Fumes temperature at minimum heat capacity	°C	56,8
CO2 at nominal heat capacity - Natural Gas	%	9,2- 9,
CO2 at minimum heat capacity - Natural Gas	%	9,0 - 8,8
CO2 at nominal heat capacity - Universal LPG	%	10,3 - 10,1
CO2 at minimum heat capacity - Universal LPG	%	9,8 - 9,6
CO at nominal heat capacity	ppm	68
Fumes mass at nominal heat capacity	g/s	44,64
Fumes mass at minimum heat capacity	g/s	2,31
NOx class	class	6
Weighted Nox (0% O2) mg/kWh	mg/kWh	52
Heating circuit		
Adjustable heating temperature	°C	30-80 / 25-45
Maximum operating water temperature for heating circuit	°C	95
Maximum operating pressure for heating circuit	kPa	300
Minimum operating pressure for heating circuit	kPa	30
Dimensional characteristics		
Width	mm	670
Depth	mm	485
Height	mm	642
Gross weight	Kg	74
Water connections		
Flow	Ø	1 1/2"
Gas	Ø	1"
Return	Ø	1 1/2"
Flue fittings		
Maximum electric fan pressure available	Pa	100 (Single unit)
Minimum electric fan pressure available	Pa	30 (Single unit)
Max discharge length Ø80/125	m	10 (Single unit)
Max discharge length Ø80/80	m	40 (Single unit)
Max discharge length Ø80	m	25 (Single unit)
Max. discharge length Ø100	m	30
Electrical specifications		
Voltage-frequency	V/Hz	240 / 50

Max Absorbed Power	W	216
Insulation rate	IP	X5D
Gas supply		
Nominal supply pressure - Natural Gas	kPa	1.13
Heating Max. fan speed - Natural Gas	Hz	247
Heating Min. fan speed - Natural Gas	Hz	53
Fuel consumption - Natural Gas	MJ/h	396
Nominal Supply pressure - Universal LPG	kPa	2.75
Heating Max. fan speed - Universal LPG	Hz	240
Heating Min. fan speed - Universal LPG	Hz	53
Fuel consumption - Universal LPG	MJ/h	396

2.2.8. TECHNICAL ASSEMBLY

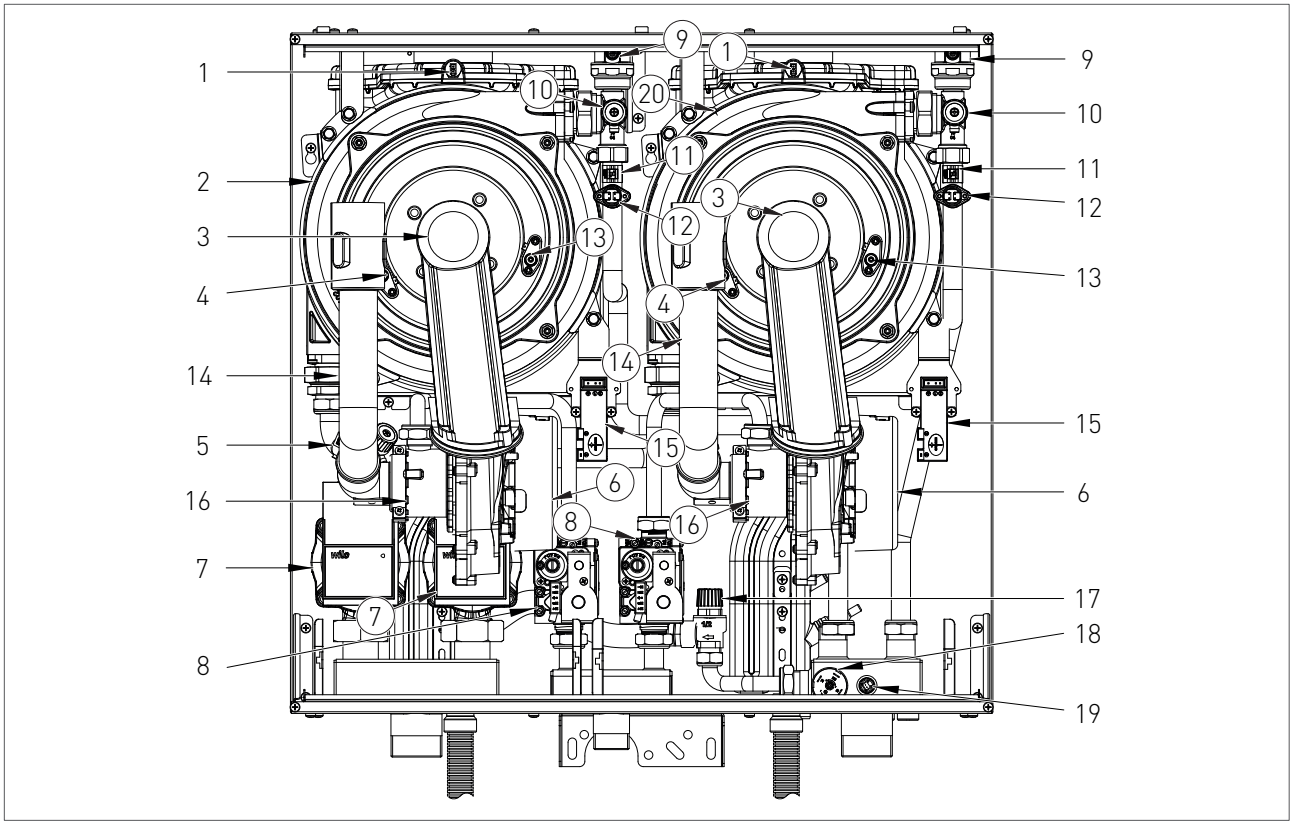

KEY

1. FUMES SAFETY THERMOFUSE
2. SLAVE UNIT HEAT EXCHANGER
3. BURNER UNIT
4. DETECTION ELECTRODE
5. RETURN PROBE
6. ELECTRIC FAN
7. CIRCULATOR
8. GAS VALVE
9. AUTOMATIC AIR RELIEF VALVE
10. MANUAL AIR RELIEF VALVE
11. HEATING PROBE
12. SAFETY THERMOSTAT
13. LIGHT UP ELECTRODE
14. AIR SUCTION TUBE
15. START-UP TRANSFORMER
16. PROPORTIONAL VENTURI
17. SAFETY VALVE 3 bar
18. WATER PRESSURE SWITCH
19. COLLECTOR PROBE
20. MASTER UNIT HEAT EXCHANGER

2.2.9. HYDRAULIC BOARD

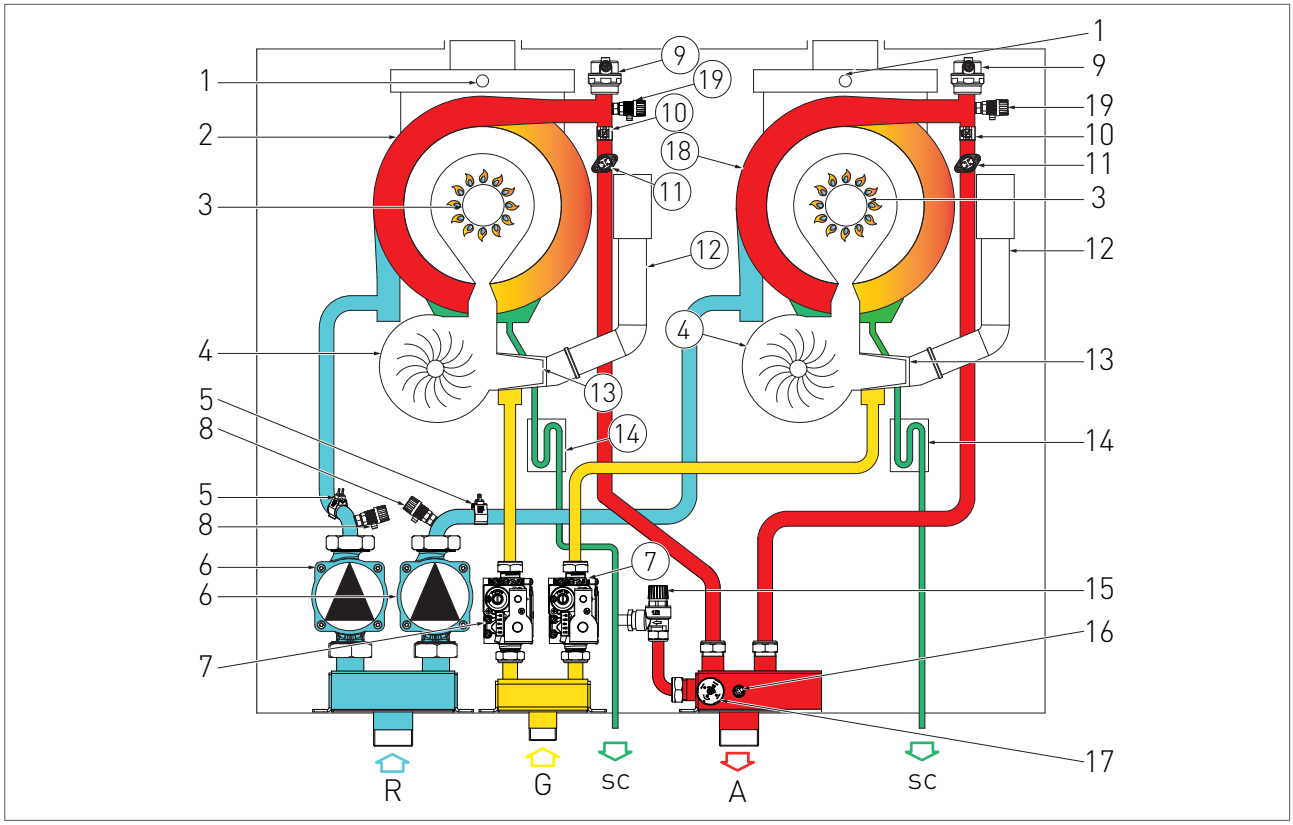

KEY

R. HEATING RETURN
G. GAS INLET
SC. CONDENSATE DRAIN
A. HEATING FORWARD

1. FUMES SAFETY THERMOFUSE
2. SLAVE HEAT EXCHANGER
3. BURNER UNIT
4. ELECTRIC FAN
5. RETURN PROBE
6. CIRCULATOR
7. GAS VALVE
8. SYSTEM DRAINING TAP
9. AUTOMATIC AIR RELIEF VALVE
10. HEATING PROBE
11. SAFETY THERMOSTAT
12. AIR SUCTION TUBE
13. PROPORTIONAL VENTURI
14. CONDENSATE COLLECTION SIPHON
15. SAFETY VALVE 3 bar
16. COLLECTOR PROBE
17. WATER PRESSURE SWITCH
18. MASTER HEAT EXCHANGER
19. MANUAL AIR RELIEF VALVE

SUPPORT CENTRE

2.2.10. SLAVE BOARD ELECTRICAL CONNECTIONS

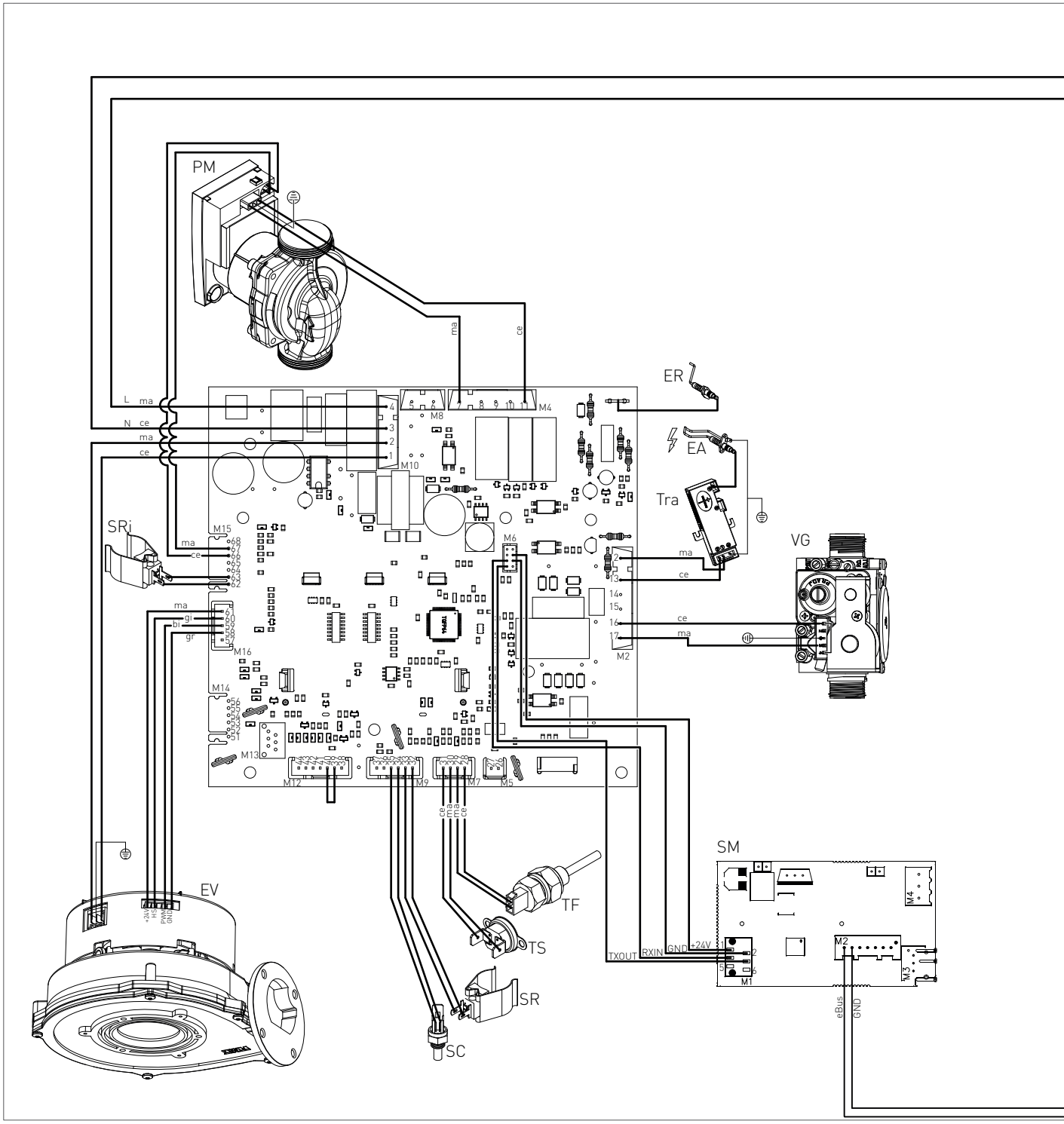

ER: DETECTION ELECTRODE	TS: SAFETY THERMOSTAT		CE: BLUE
EA: START-UP ELECTRODE	SM: MODBUS BOARD		MA: BROWN
PM: MODULATING CIRCULATOR	SR: HEATING PROBE		AR: ORANGE
VG: GAS VALVE	EV: ELECTRIC FAN	L: LINE	GI: YELLOW
TRA:START-UP TRANSFORMER	TF: FUMES THERMOFUSE (102°C)	N: NEUTRAL	BI: WHITE
SC: COLLECTOR PROBE	SRI: SYSTEM RETURN PROBE	NE: BLACK	GR. GREY

2.2.11. MASTER BOARD ELECTRICAL CONNECTIONS

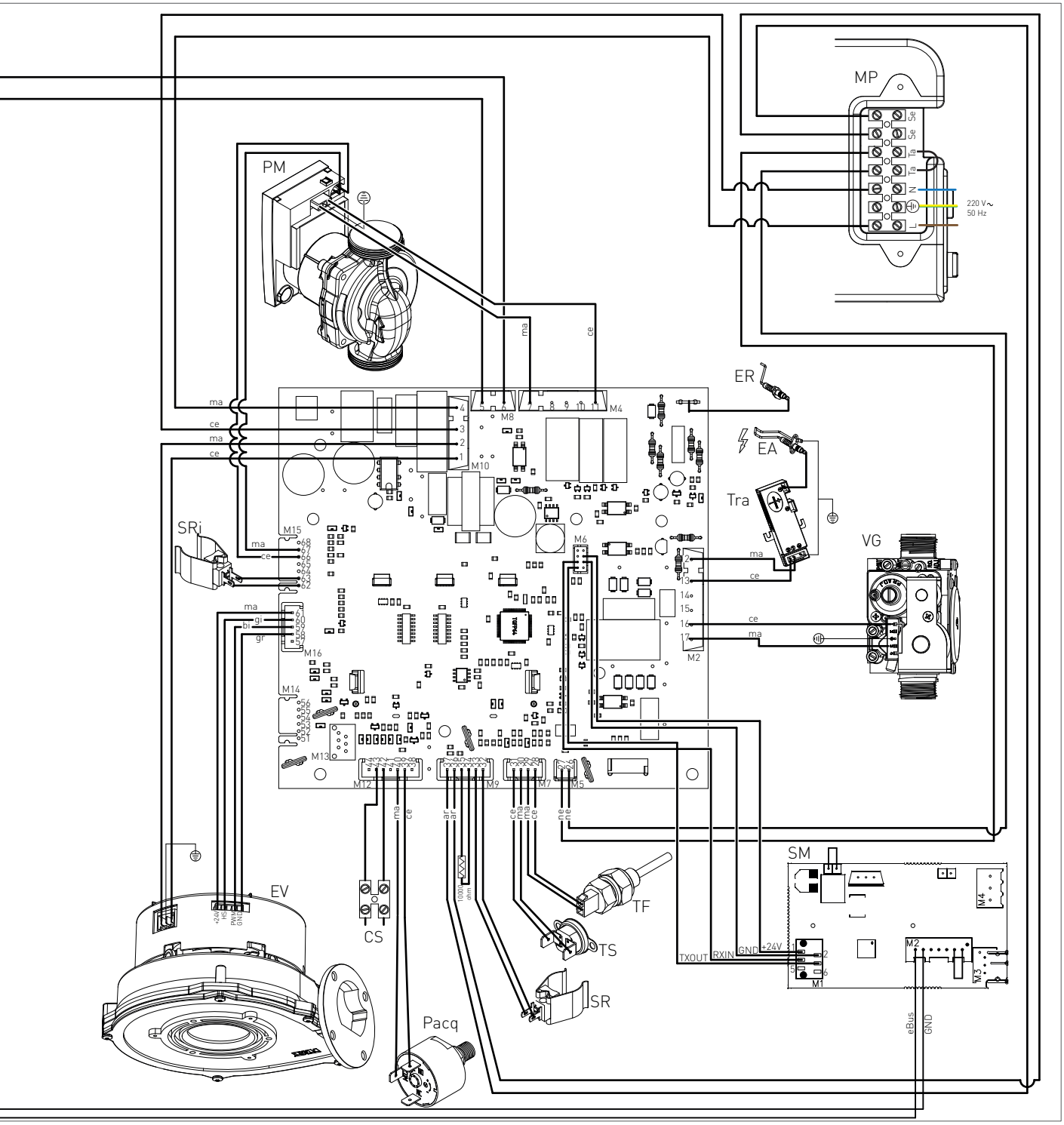

ER: DETECTION ELECTRODE
EA: START-UP ELECTRODE
PM: MODULATING CIRCULATOR
VG: GAS VALVE
TRA:START-UP TRANSFORMER
SM: MODBUS BOARD
CS: D.H.W. PRODUCTION CONTACT

TS: SAFETY THERMOSTAT
PACQ:WATER PRESSURE SWITCH
SR: HEATING PROBE
EV: ELECTRIC FAN
TF: FUMES THERMOFUSE (102°C)
SRI: SYSTEM RETURN PROBE

MP: PANEL TERMINAL
SE: EXTERNAL PROBE
TA: ENVIRONMENT THERMOSTAT
L: LINE
N: NEUTRAL
NE: BLACK

CE: BLUE
MA: BROWN
AR: ORANGE
GI: YELLOW
BI: WHITE
GR. GREY

2.2.13. ACCESSING THE BOILER

For the majority of the control and maintenance operations you have to remove one or more panels of the casing.

The side panels can be removed only after removing the front panel.

To intervene on the front of the boiler proceed as follows:

› remove the fastening screws (1 - fig.1) placed on the lower edge of the front panel;

› grab the front panel from the bottom and remove it pulling it to yourself and then upwards (see fig. 1).

To intervene on the side panels of the boiler proceed as follows:

› remove the fastening screws (2 - fig.1) placed on the front edge of the side panel;

› grab the bottom of the panel and remove it by moving it sideways and then pulling it upwards (see fig. 1).

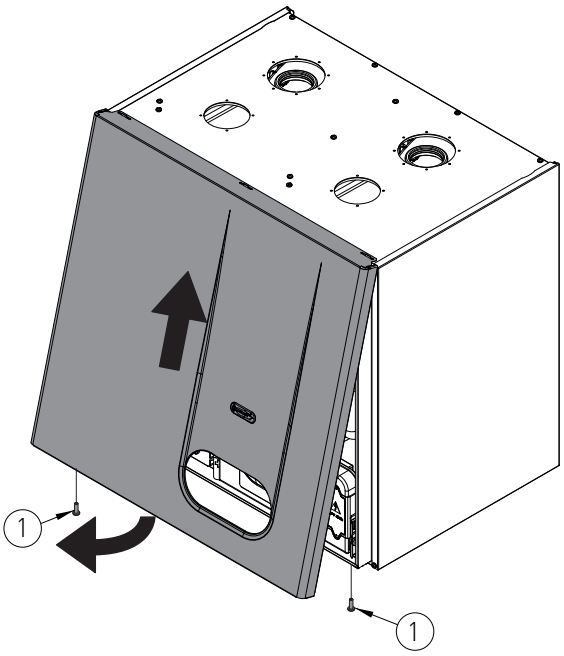

fig. 1

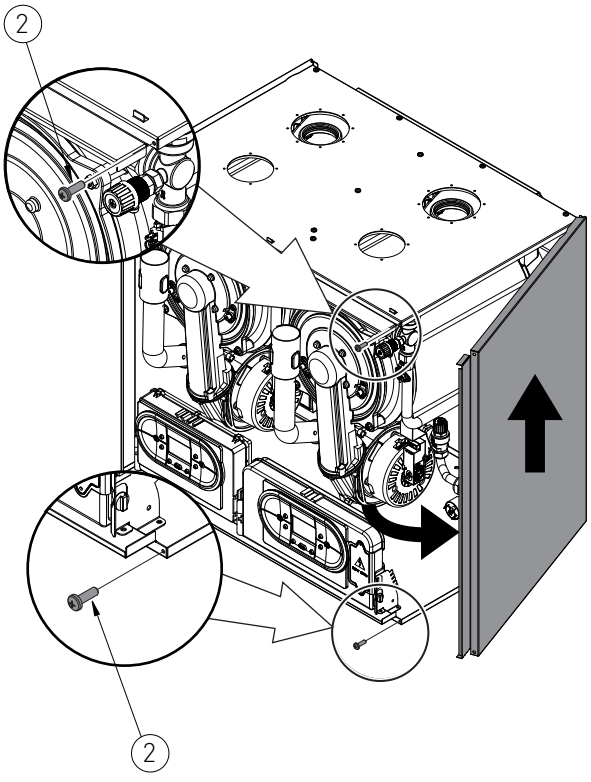

2.2.12. ACCESSING THE MASTER ELECTRONIC BOARD

In order to intervene on the electrical connections of the master electronic board, please proceed as follows:

DANGER
Cut off the voltage from the main switch.

› Grab at the same time the support brackets of the control panel (fig. 1) loosening them and turn the panel downwards;

› unscrew the four fastening screws 1 - fig. 1;

› remove the crankcase pulling it upwards.

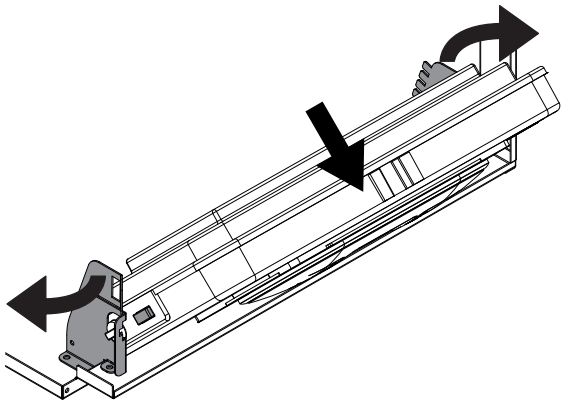

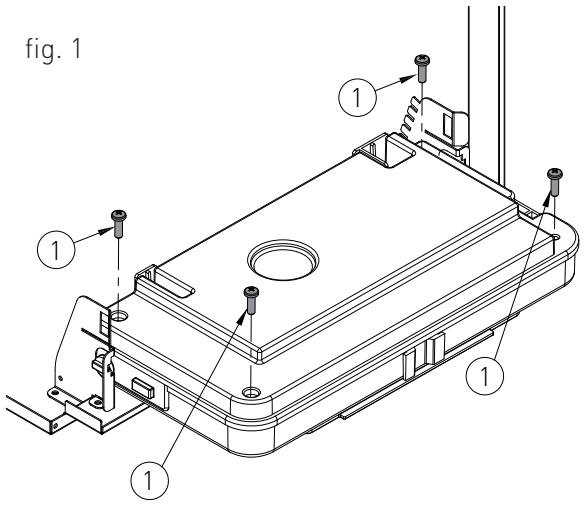

fig. 1

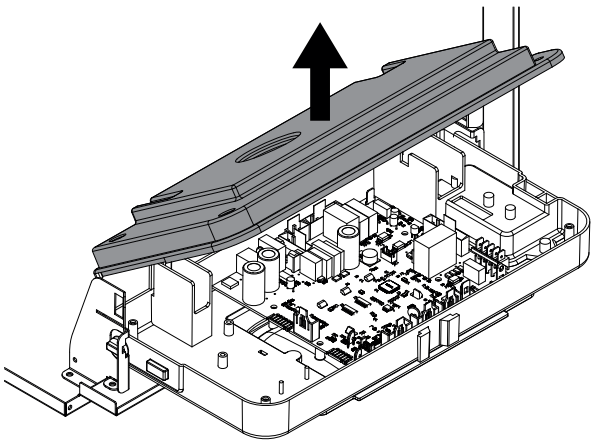

2.2.13. ACCESSING THE SLAVE ELECTRONIC BOARD

In order to intervene on the electrical connections of the slave electronic board, please proceed as follows:

DANGER
Cut off the voltage from the main switch.

› Grab at the same time the support brackets of the control panel (fig. 1) loosening them and turn the panel downwards;

› unscrew the two fastening screws 1 - fig. 1;

› release the four hooks '2' - fig. 1;

› remove the crankcase pulling it upwards.

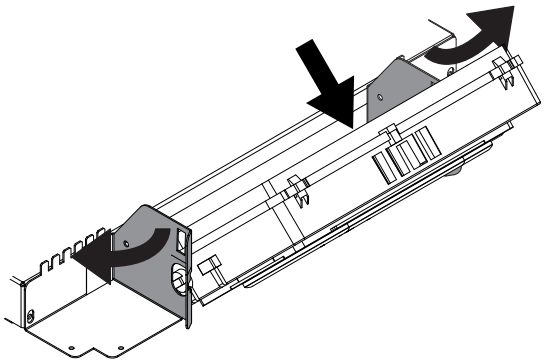

fig. 1

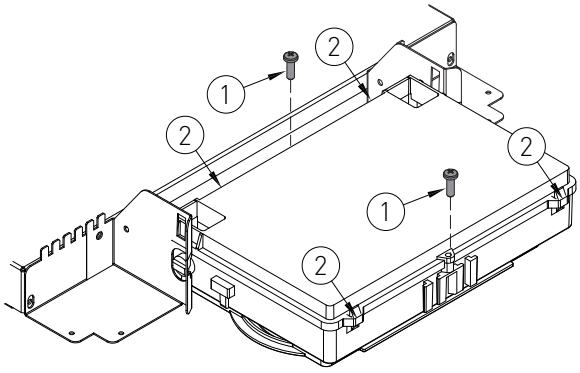

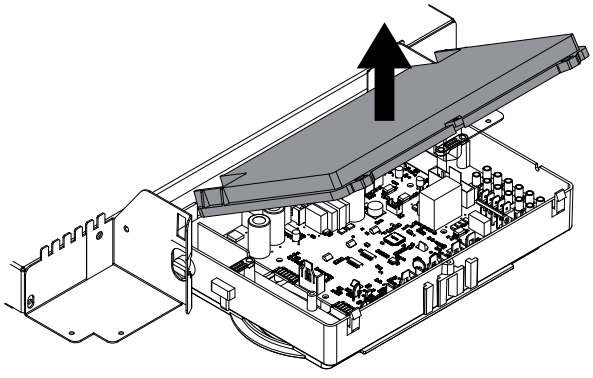

2.2.14. SYSTEM EMPTYING

It is not recommended to empty the heating system as the changes of water generate the increase of limestone deposits inside the exchangers. In case it is necessary to protect against freezing the heating circuit by adding anti-freeze liquid to the system water, these products must be approved by the company.

The possible limestone descaling of the elements of the boiler must be performed by means of the substances approved by the company, in compliance with what has been specified in the safety data sheet of the used product, ventilating the environment, wearing protective clothing, avoiding mixing different products, protecting the device and the surrounding objects.

Whenever you need to empty the system, proceed as follows:

› turn off the main power supply switch;

› wait for the boiler to cool down;

› connect a flexible tube to the system emptying outlet and connect the other end of the tube to a suitable discharge;

› rotate the RS draining tap of the boiler (fig. 1) and, if installed, of the hydraulic compressor and of the collectors of the system;

› open the relief valves of the radiators starting from the one at the top and continuing downwards;

› after draining out all water, close the relief valves of the radiators and the emptying tap;

› if it is necessary to empty only the boiler, close the delivery/return sectioning taps of the heating circuit and open only the draining tap placed on the lower part of the boiler and inserted in the pump collector.

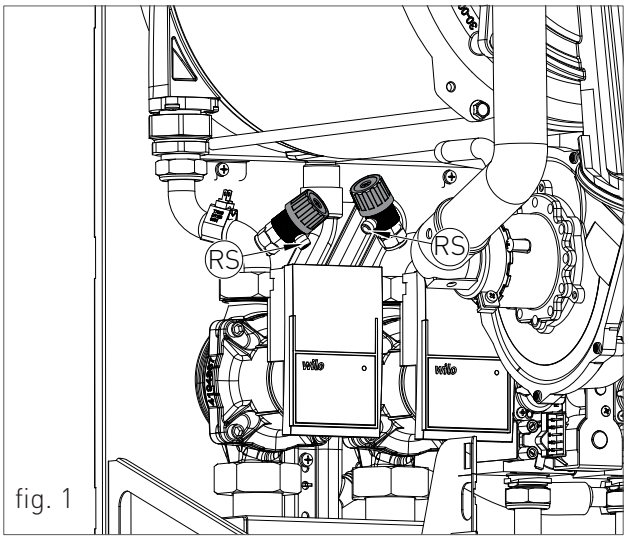

fig. 1

2.2.13. MAINTENANCE OPERATIONS

DANGER

Before carrying out any cleaning or part replacement operations, ALWAYS turn off the ELECTRICITY, WATER and GAS supplies to the boiler.

ATTENTION

Radiant Bruciatori s.p.a. will not be held responsible for damage to any of the boiler's components caused by non-compliance with this instruction.

For all maintenance operations requiring removal of the boiler casing, refer to the procedures described in chapter "ACCESSING THE BOILER".

CLEANING THE MAIN EXCHANGER MODULE AND COMBUSTION UNIT (SEE FIG. 1):

- Disconnect the electrical connections of the electric fan.
- Disconnect the joint and remove the pipe linking the gas valve to the injector unit (venturi, fig.1 - A).
- Disconnect the joint and remove the gas feed pipe from the gas valve.
- Un-plug the ignition electrode and flame detection wires from the ignition control unit.
- Unscrew the nuts (fig.1 - C) securing the burner unit (consisting of a fan, manifold and burner) to the primary heat exchanger.
- Remove the burner unit (fig.1 - B), paying particular attention not to remove the ceramic fibre protection from the bottom of the heat exchanger.
- Check that the burner (fig.1 - E) is not affected by deposits, scaling or excessive oxidation. Check that all the holes in the burner are free.
- Clean the electrodes (fig.1 - D) carefully without altering their positions with respect to the burner.

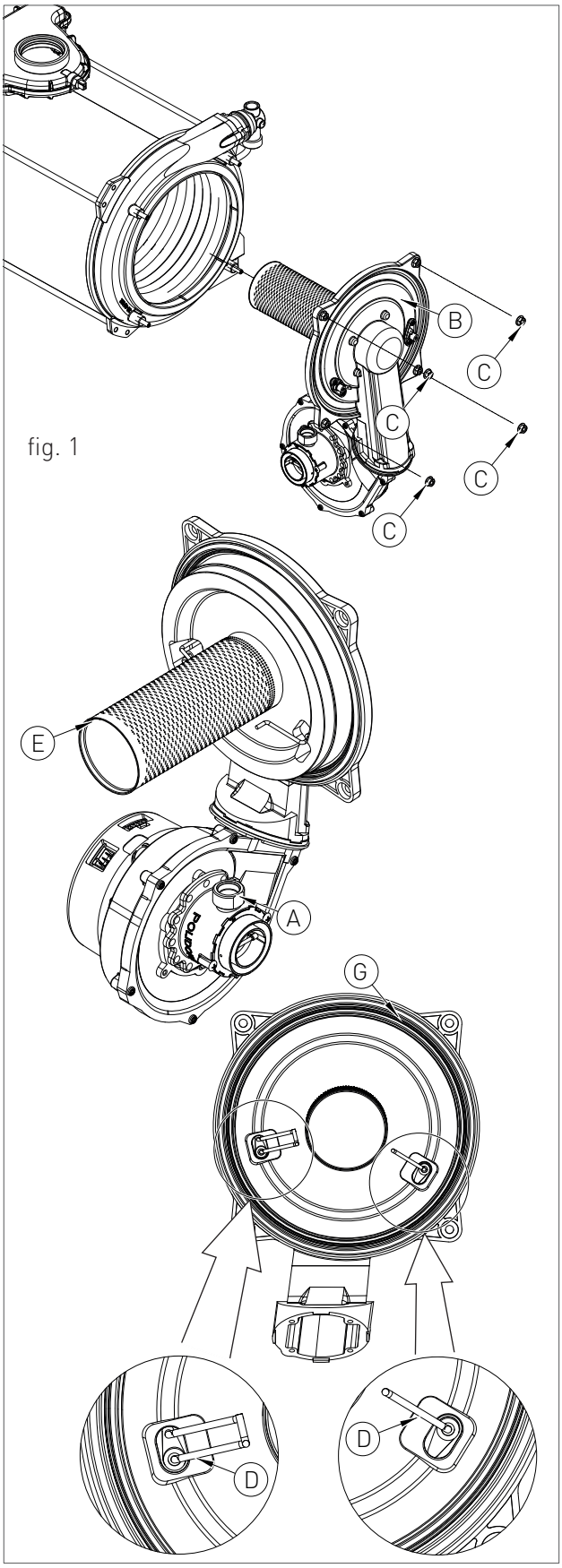

fig. 1

- Clean the burner cylinder (fig.1 - E) using a non-metal brush and without damaging the ceramic fibre.
- Check the integrity of the washer (fig.1 - G) on the cover of the burner.
- Clean the heat exchanger (fig.2 - F) using a household detergent for stainless steel, distributing the product on the spirals of the exchanger using a brush. Do not wet the ceramic fibre coating (fig.2 - H). Wait a few minutes then remove the deposits using a non-metal brush. Then remove the residues under running water.
- Please twist-off the holding screw of the condensate trap (fig. 2 - T); remove the trap and wash under running water.
- With the cleaning completed, re-assemble the components following the above procedure in reverse order.
- Finally, check the boiler to make sure that all gas and exhaust joints are tight.

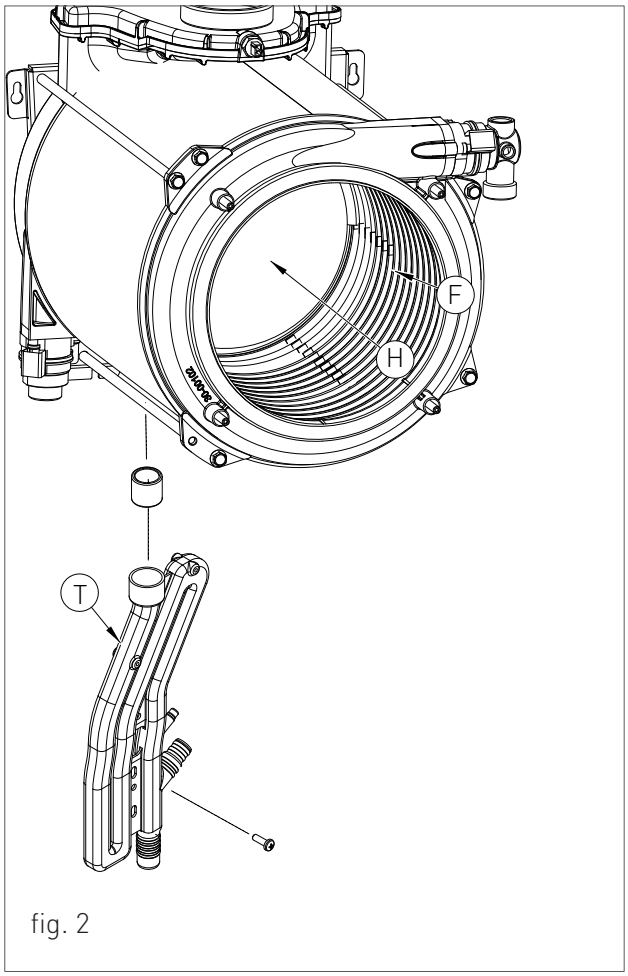

fig. 2

SUPPORT CENTRE

PART REPLACEMENT:

IGNITION AND/OR FLAME DETECTION ELECTRODES (FIG. 3)

- Un-Plug the electrode wires.
- Slacken the fixing screws.
- Remove the electrodes. When fitting the new ones, check that the seals are not damaged. Replace if necessary.
- Reconnect the wires and re-assemble the components following the above procedure in reverse order.
- Switch on the power supply and restart the appliance.

ATTENTION

If the boiler does not restart, check the positions of the electrodes (especially the ignition electrode). Make sure that original position and distances between the electrodes and the burner are respected to avoid a boiler malfunction).

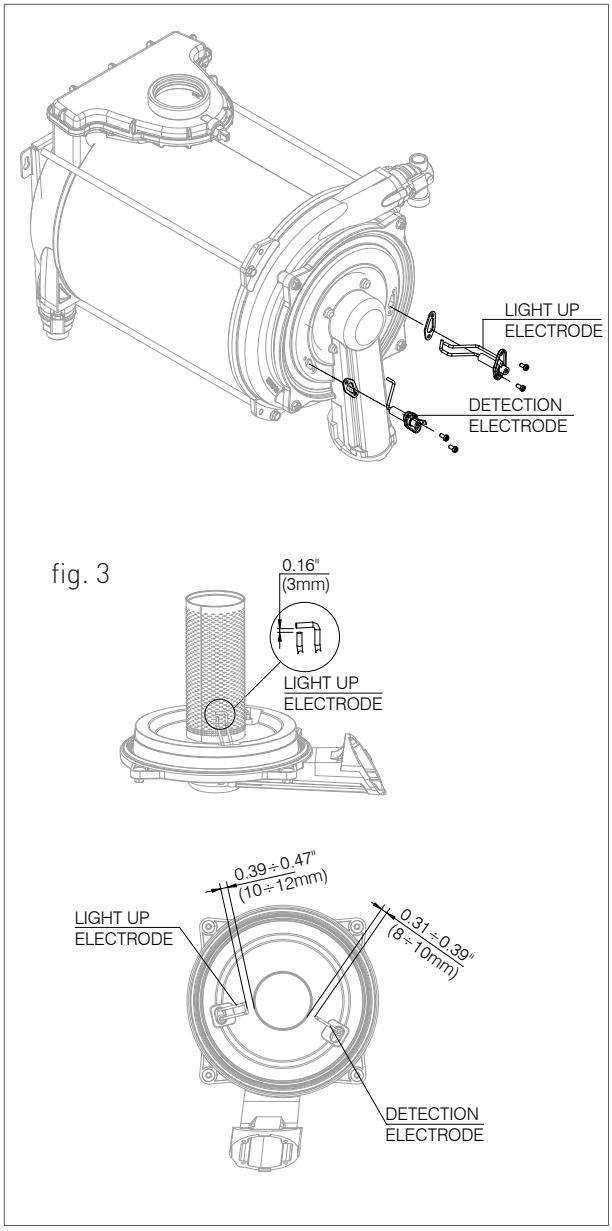

fig. 3

MISCELLANEOUS ITEMS (FIG. 4 - A)

- Disconnect the electrical connection.
- Unscrew the fixing screws (fig.4 - C).
- Replace the thermostat and re-assemble the components following the above procedure in reverse order.
- Switch on the electricity and restart the appliance.

MISCELLANEOUS ITEMS (FIG. 4 - B)

- Close the shut-off valves and drain the central heating circuit of the boiler.
- Un-screw the components (fig. 4 - B).
- Replace the thermostat and re-assemble the components following the above procedure in reverse order.
- Switch on the water and fill the system with water. Check for any leaks from the joints and bleed off any air from the heating circuit.

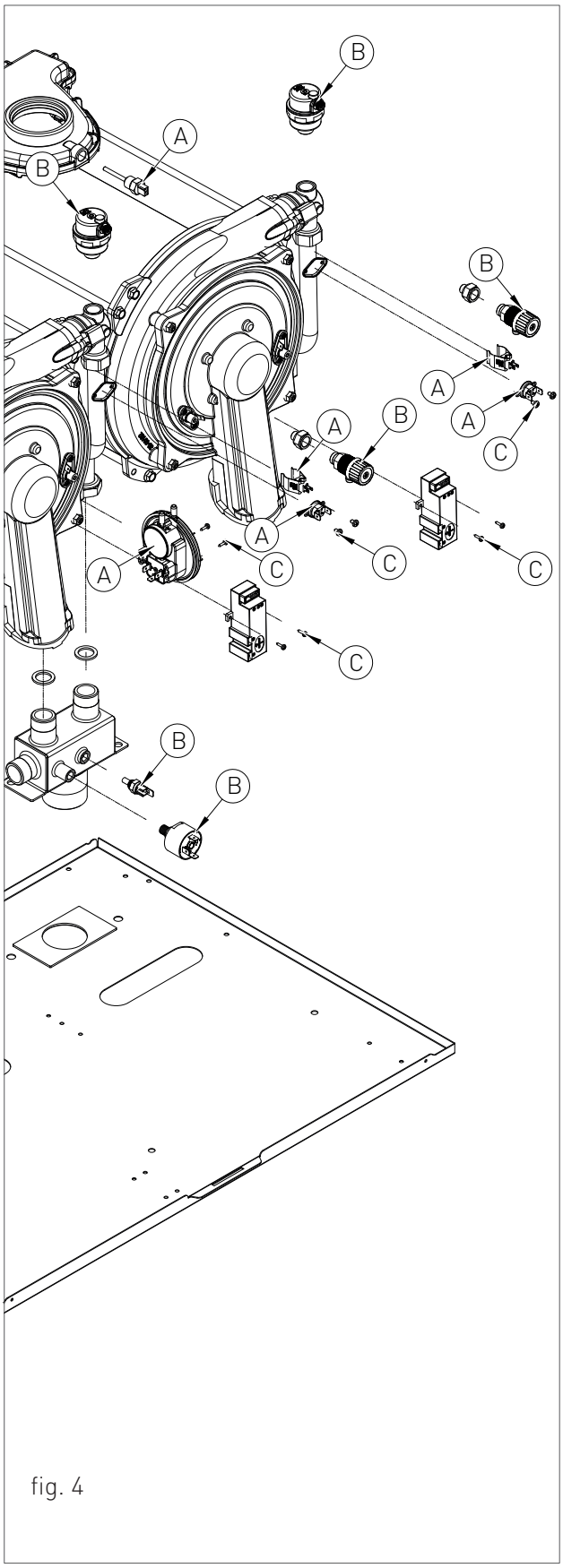

fig. 4

GAS VALVE (FIG. 5)

- Close the gas tap.
- Disconnect the joints and remove the gas pipe connecting the gas valve to the venturi.
- Unscrew the ring-nut at the bottom of the room-sealed chamber and remove the gas valve.
- Replace the gas valve and re-assemble the various components and proceed in reverse order. Please have a special attention to:
- Replace all the gas gaskets;
- Seal fully all the gas connections;
- Restore the electric and gas supplies, and please make sure there are no leakages thru soapy solutions or detective sprays.

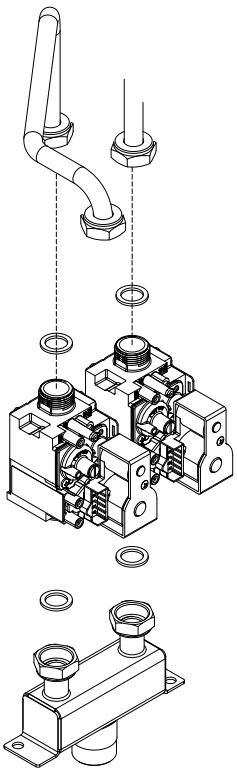

fig. 5

ELECTRIC FAN (FIG. 6)

- Remove and dismantle the entire burner unit (see paragraph "Cleaning the main exchanger module and combustion unit (fig. 1)").
- Use an 8 mm spanner to unscrew the four nuts securing the electric fan to the gas manifold and then remove the electric fan, noting the positions of the washer and diaphragm.
- Remove the air intake duct, unscrew the fixing screws from the venturi and remove the electric fan.
- Replace the electric fan and re-assemble the components following the above procedure in reverse order.
- Switch on the electricity and check the soundness of the joint by measuring the CO2 levels.

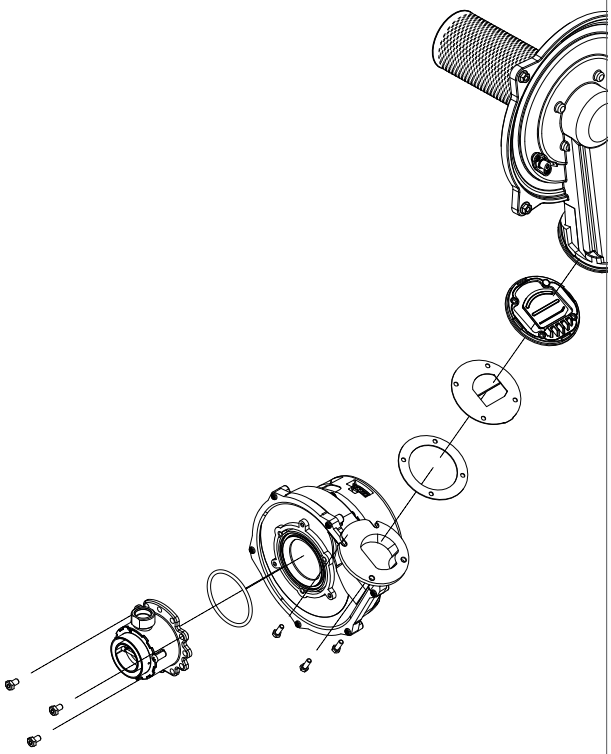

fig. 6

CIRCULATING PUMP (FIG. 7)

- Close the shut-off valves and drain the central heating circuit of the boiler.
- Switch off the power to the boiler.
- Un-screw the holding union rings.
- Replace the circulation pump and re-assemble the components following the above procedure in reverse order.
- Switch on the electricity, water, and fill the system with water. Check for any leaks from the joints and bleed off any air from the heating circuit.

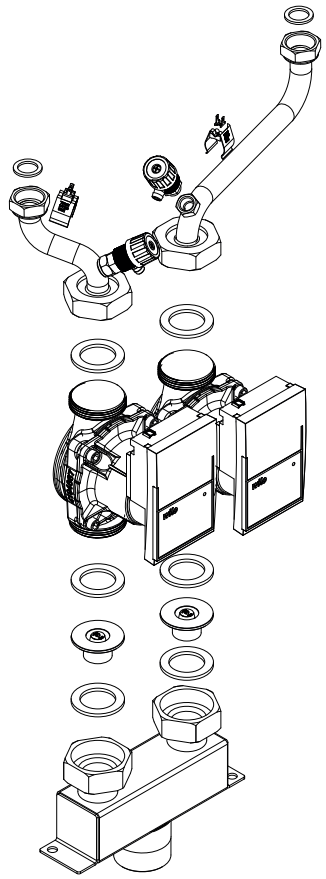

fig. 7

PRIMARY HEAT EXCHANGER (FIG. 8)

- Close the shut-off valves and drain the central heating circuit of the boiler.
- Switch off the power and gas supply to the boiler.
- Remove and dismantle the entire burner unit (see paragraph "Cleaning the main exchanger module and combustion unit (fig. 1)").
- Un-screw the holding screw of the condensate trap, then slip the pipe.
- Remove the fixing springs and then the delivery and return pipes.
- Twist-off the holding screws of the back exchanger, then remove the exchanger.
- Replace the heat exchanger and re-assemble the components following the above procedure in reverse order.
- Switch on the electricity, water and gas supplies and fill the system with water. Check for any leaks from the joints and bleed off any air from the circuit. Restart the boiler, making sure that there are no gas leaks.

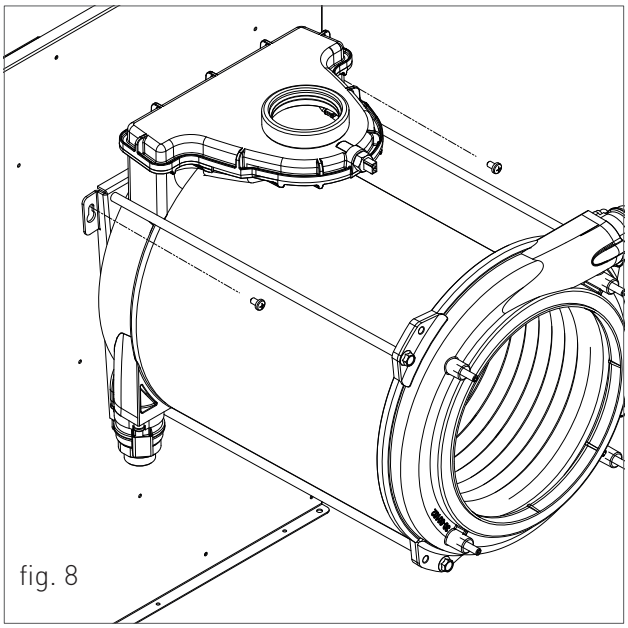

fig. 8

2.2.15. FAULT SIGNALLING CODES

The fault signalling codes are displayed only on the display of the master control panel.

Except for the faults common for both units (as for example: E04, E78, E06, E99), the fault signalling code will be displayed with the prefix '01' or '02', which indicates that in that unit, there is a fault (01 = main master unit, 02 = secondary slave unit).

If there is a fault in both units, the display shows only the most serious signalling code. In order to view the next signalling code, press the '⊕' key of the 'S' (S) symbol. After restoring the first fault, the display will show the next alternating signalling code of the temperature of the collector. In order to manually reset the unit, press the RESET '(R)' key when the display shows the signalling code.

To view the last 5 fault signalling codes chronologically, starting with the most recent one, activate the 'OFF' mode by pressing the FUNCTION '⏻' key and hold the key INFO '(i)' for 5 seconds. Use keys '⊕' and '⊖' of the heating circuit to scroll through the list of saved faults. To reset the fault history press the RESET '(R)' key. To exit display mode press the INFO '(i)' key.

When a signalling code represents a fault common to both units (such as for example: E04, E78, E06, E99) it will be preceded by the message E(x)', where '(x)' will be the chronologically order number in the last 5 signallings.

CODE	FAULT	POSSIBLE CAUSE	SOLUTION	RESET
E01	***FLAME BLOCK***	**NO FLAME LIGHT UP**		MANUAL RESET (HOLD THE RESET ' ® ' KEY FROM THE MASTER CONTROL PANEL).
		GAS MISSING;	CHECK THE ADDUCTION NETWORK;	
		MASS OR BROKEN START-UP ELECTRODE;	REPLACE IT;	
		GAS VALVE BROKEN;	REPLACE IT;	
		SLOW LIGHT UP TOO LOW ADJUSTMENT;	ADJUST MINIMUM OR SLOW LIGHT UP;	
		PRESSURE TOO HIGH AT THE INPUT OF THE GAS VALVE (ONLY FOR GPL BOILER).	CHECK THE MAXIMUM ADJUSTMENT PRESSURE	
		WITH FLAME LIGHT UP		
		NEUTRAL AND PHASE INVERTED POWER SUPPLY;	PROPERLY CONNECT THE POWER SUPPLY;	
		DETECTION ELECTRODE BROKEN;	REPLACE IT;	
		DETECTION ELECTRODE CABLE DISCONNECTED.	CHECK THE WIRING.	
		ELECTRICAL CURRENT PHASE-PHASE	IF THE TENSION MEASURES BETWEEN NEUTRAL AND GROUND IS ALMOST EQUAL TO THE ONE MEASURED BETWEEN PHASE AND GROUND, YOU HAVE TO INSTALL A PHASE-PHASE TRANSFORMER KIT (COD. 88021LA)	
E02	***SAFETY THERMOSTAT (95°C)***	THERMOSTAT CABLE BROKEN OR DISCONNECTED;	CHECK THE WIRING;	AUTOMATIC.
		BROKEN THERMOSTAT	REPLACE IT.	

CODE	FAULT	POSSIBLE CAUSE	SOLUTION	RESET
E03	***FUMES SAFETY THERMOFUSE (102°C)***	THERMOFUSE BROKEN;	REPLACE IT;	MANUAL RESET (HOLD THE RESET ® KEY FROM THE MASTER CONTROL PANEL).
		THERMOFUSE CABLE DISCONNECTED.	CHECK THE WIRING.	
E04	***WATER MISSING IN THE SYSTEM***	INSUFFICIENT WATER PRESSURE INSIDE THE SYSTEM (LOWER THAN 0.3 BAR);	LOAD THE SYSTEM;	AUTOMATIC.
		WATER PRESSURE SWITCH CABLE DISCONNECTED;	CHECK THE WIRING;	
		WATER PRESSURE SWITCH BROKEN.	REPLACE IT.	
E05	***HEATING PROBE***	BROKEN OR INCORRECTLY CALIBRATED PROBE (RESISTANCE VALUE 10 KOHM AT 25 °C NTC);	REPLACE IT;	AUTOMATIC.
		DISCONNECTED OR WET PROBE CONNECTOR.	CHECK THE WIRING.	
E06	***DOMESTIC CIRCUIT PROBE***	BROKEN OR INCORRECTLY CALIBRATED PROBE (RESISTANCE VALUE 10 KOHM AT 25 °C NTC);	REPLACE IT;	AUTOMATIC.
		DISCONNECTED OR WET PROBE CONNECTOR.	CHECK THE WIRING.	
E15	***RETURN PROBE***	BROKEN OR INCORRECTLY CALIBRATED PROBE (RESISTANCE VALUE 10 KOHM AT 25 °C NTC);	REPLACE IT;	AUTOMATIC.
		DISCONNECTED OR WET PROBE CONNECTOR.	CHECK THE WIRING.	

CODE	FAULT	POSSIBLE CAUSE	SOLUTION	RESET
E16	***ELECTRIC FAN***	ELECTRIC FAN BOARD BROKEN;	REPLACE IT;	AUTOMATIC.
		ELECTRIC FAN BROKEN;	REPLACE IT;	
		FAULTY POWER SUPPLY CABLE.	REPLACE IT.	
E18	***INSUFFICIENT CIRCULATION***	EXCHANGER OBSTRUCTED;	CLEAN OR REPLACE THE EXCHANGER;	AUTOMATIC.
		CIRCULATOR BROKEN OR DIRTY IMPELLER.	CLEAN THE IMPELLER OR REPLACE THE CIRCULATOR.	
E21	***GENERAL INTERNAL BOARD ERROR***	INCORRECT SIGNAL RECOGNITION BY THE MODULATION BOARD MICRO-PROCESSOR.	IF THE MODULATION BOARD DOES NOT RESET THE ERROR AUTOMATICALLY, REPLACE IT.	AUTOMATIC.
E22	***PARAMETERS PROGRAMMING REQUEST***	MICRO=PROCESSOR MEMORY LOSS.	PARAMETERS REPROGRAMMING.	MANUAL RESET (CUT OFF THE TENSION).
E31	***SOLAR AUXILIARY BOARD CONNECTION FAULTS***	SOLAR AUXILIARY BOARD DISCONNECTED.	SET MANUALLY THE VALUE OF PARAMETER P34 TO '0'.	AUTOMATIC.
E32	***COMMUNICATION ERROR BETWEEN THE BOILER BOARD AND THE MODBUS BOARD***	NO ELECTRICAL CONNECTION;	CHECK THE WIRING;	AUTOMATIC.
		MODBUS BOARD BROKEN;	REPLACE IT;	
E35	***RESIDUAL FLAME***	FAULTY DETECTION ELECTRODE;	CLEAN IT OR REPLACE IT;	MANUAL RESET (HOLD THE RESET '®' KEY FROM THE MASTER CONTROL PANEL).
		FAULTY DETECTION ELECTRODE CABLE;	REPLACE IT;	
		FAULTY MODULATION BOARD.	REPLACE IT.	
E40	***SUPPLY VOLTAGE***	SUPPLY VOLTAGE OFF THE OPERATION RANGE (≤160 VOLTS).	CHECK THE POWER SUPPLY NETWORK (THE ERROR DEACTIVATES AUTOMATICALLY AS SOON AS THE SUPPLY VOLTAGE FALLS BACK WITHIN THE REQUESTED LIMITS).	AUTOMATIC.

CODE	FAULT	POSSIBLE CAUSE	SOLUTION	RESET
E52	***COMMUNICATION FAULT BETWEEN MODBUS CONTROLLER AND MODBUS CONTROL UNIT***	NO ELECTRICAL CONNECTION;	CHECK THE WIRING;	AUTOMATIC.
		MODBUS CONTROL UNIT BROKEN.	REPLACE IT;	
E78	***COLLECTOR PROBE***	BROKEN OR INCORRECTLY CALIBRATED PROBE (RESISTANCE VALUE 10 KOHM AT 25 °C NTC);	REPLACE IT;	AUTOMATIC.
		DISCONNECTED OR WET PROBE CONNECTOR.	CHECK THE WIRING.	
E99	***GENERAL ERROR COMING FROM THE CRAD AREA BOARD***	GENERAL ERROR.	ON THE CONTROL PANEL OF THE CRAD AREA BOARD, CHECK THE TYPE OF ERROR DISPLAYED AND READ ABOUT THE POSSIBLE REFERENCE SOLUTIONS IN THE MANUAL OF THE CRAD AREA BOARD.	AUTOMATIC.

2.2.16. ACTIVE FUNCTIONS SIGNALLING CODES

CODE	FUNCTION	DESCRIPTION
F07	***CHIMNEY SWEEP ACTIVE***	YOU CAN ACTIVATE IT BY HOLDING FOR 7 SECONDS THE RESET 'Ⓡ' KEY AND YOU CAN DEACTIVATE IT BY TURNING OFF THE BOILER. THIS FUNCTION BRINGS THE BOILER TO ITS MINIMUM AND MAXIMUM HEATING POWER FOR 15 MINUTES DEACTIVATING THE MODULATION FUNCTION. GENERALLY USED FOR PERFORMING THE COMBUSTION AND CALIBRATION TESTS.
F08	***HEATING CIRCUIT ANTI-FREEZE***	IT ACTIVATES AUTOMATICALLY WHEN THE HEATING PROBE DETECTS A TEMPERATURE OF 12°C. THE BOILER OPERATES AT MINIMUM GAS PRESSURE WITH THE DIVERTER VALVE SET TO 'WINTER' MODE. IT DEACTIVATES WHEN IT REACHES A TEMPERATURE OF 30°C OF THE DELIVERY WATER AND, IF THE RETURN PROBE IS MOUNTED, WHEN IT REACHES A RETURN TEMPERATURE OF 20°C.
F09	***DOMESTIC ANTI-FREEZE***	IT ACTIVATES AUTOMATICALLY WHEN THE DOMESTIC PROBE DETECTS A TEMPERATURE OF 4°C. THE BOILER OPERATES AT MINIMUM GAS PRESSURE WITH THE DIVERTER VALVE SET TO 'SUMMER' MODE. IT DEACTIVATES WHEN IT DETECTS A TEMPERATURE OF 8°C.
F28	***ANTI-LEGIONELLA***	IT ACTIVATES FOR THE FIRST TIME AFTER THE NEXT 60 MINUTES AFTER POWER SUPPLYING THE BOILER. AS OF THAT MOMENT, IT AUTOMATICALLY OPERATES EVERY 7 DAYS, BRINGING THE TEMPERATURE OF THE WATER INSIDE THE BOILER OVER 60°C. THIS FUNCTION IS ACTIVATED INDEPENDENTLY FROM THE STATUS OF THE BOILER TIME CONTACT, IF ENABLED BY THE CORRESPONDING PARAMETER (P15).
F33	***SYSTEM AIR RELEASE CYCLE***	IF THE WATER PRESSURE SWITCH CONFIRMATION IS MISSING, WHEN THE CONTACT IS RE-CLOSED, A 2 MINUTES RELEASE CYCLE WILL BE PERFORMED. REGULAR OPERATION IS ALLOWED ONLY AFTER THIS FUNCTION IS COMPLETED.
FH	***FAST H2O***	YOU CAN ACTIVATE/DEACTIVATED IT BY HOLDING SIMULTANEOUSLY AND FOR 7 SECONDS THE RESET 'Ⓡ' AND 'Ⓢ' DEL SÍMBOLO 'S' Ⓢ. THE "FAST H2O" FUNCTION GUARANTEES THE IMMEDIATE D.H.W SUPPLY AT THE REQUESTED TEMPERATURE.

2.2.17. GAS CONVERSION

ATTENTION

Make sure that the gas adduction tube is suitable for the new type of fuel with which the boiler is supplied.

› loosen the two screws '1' (fig.1) from the fastening bush, and remove the air suction tube;

› unscrew the tube coupling that connects the gas valve to venturi;

› unscrew the three fastening screws '2' (fig.1) of the venturi 'V' (fig.1) using a 10 key, as shown in figure 2;

› remove the two screws '3' (fig.3) and apply pressure on the rear side of venturi 'C' (fig.3);

› replace the body venturi with the one suitable for the type of supply gas (cod. 30-00225 for Natural gas / cod. 30-00226 for Universal LPG) and make sure the tooth 'D' (fig.3) is adjusted downwards on the aluminium ring nut (see fig.3);

› remount the components following the demounting operations in reverse making sure that gasket 'G' is re-assembled as shown in fig.1;

› set the boiler to operate with the new type of gas, changing the value of the parameter P02 'GAS TYPE SELECTION' from the control panel (see chapters 'DIGITECH CS PARAMETERS TABLE' and 'ACCESSING AND PROGRAMMING THE PARAMETERS');

› adjust the CO2 combustion value as indicated in chapter 'CO2 VALUE CHECK AND CALIBRATION'.

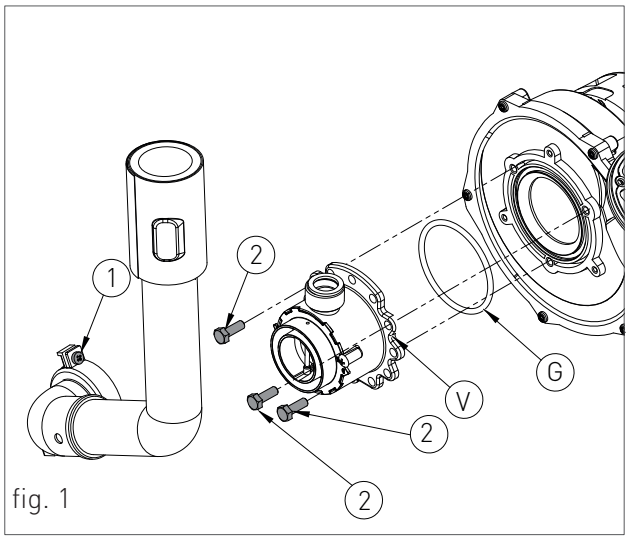

fig. 1

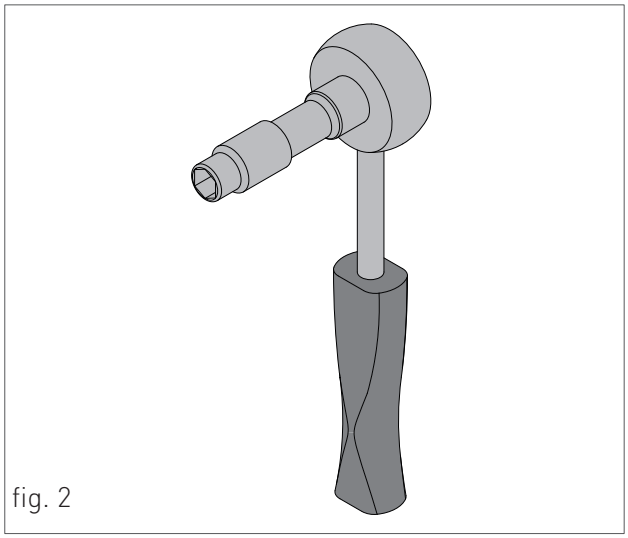
fig. 2

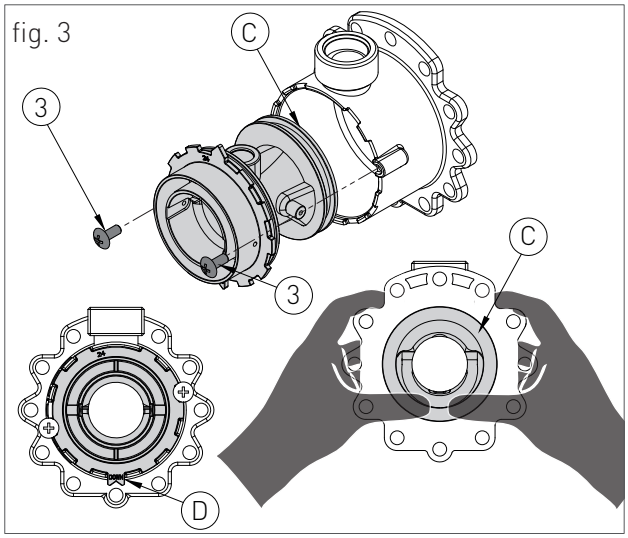

fig. 3

SUPPORT CENTRE

Aleabrax Systems

5-7 Katanning Street

Bayswater WA 6053

Ph: 08 9359 1885

info@aleabraxsystems.com.au